BOTTOM PLATE BA16; SIDE AND STARTER REINFORCEMENT

GRID U.n-U.p/U.6-U.8

C35/45-C30/37, Cv,top=2.0-5.5cm, Cv,bottom=3.5cm

SCALE 1:50

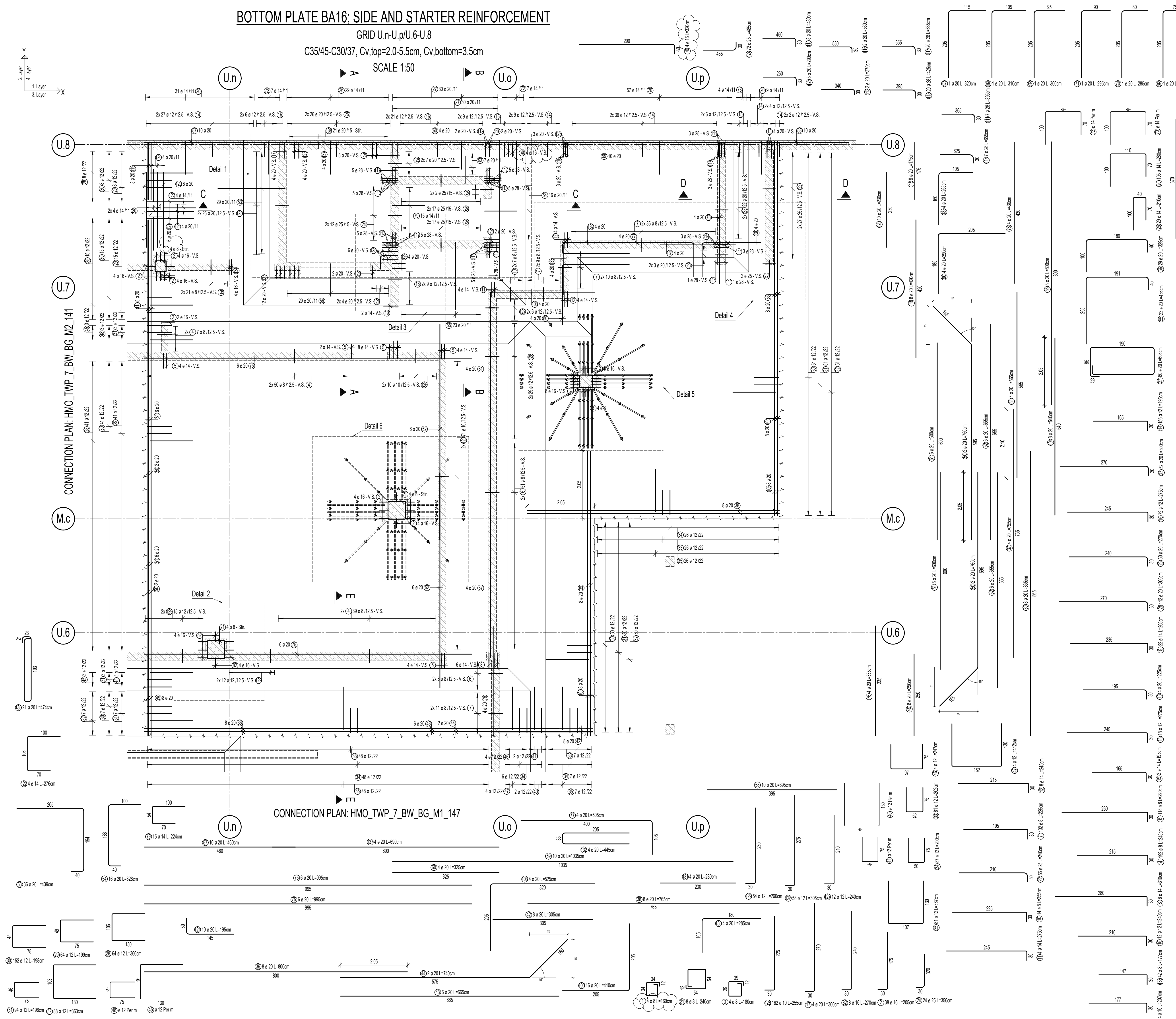

U.n
U.o
U.p
U.8
U.7
M.c
U.6
Detail 1
Detail 2
Detail 3
Detail 4
Detail 5
Detail 6
A
B
C
D
E
31 ø 14 /11 ⑳
⑰ 7 ø 14 /11
㉖ 29 ø 14 /11
㉗ 30 ø 20 /11
2x 6 ø 12 /12.5 - V.S. ⑯
2x 26 ø 20 /12.5 - V.S. ㉕
2x 21 ø 12 /12.5 - V.S. ⑯
2x 9 ø 12 /12.5 - V.S. ⑭
⑬⑧ 21 ø 20 /15 - Stir.
CONNECTION PLAN: HMO_TWP_7_BW_M2_141
CONNECTION PLAN: HMO_TWP_7_BW_BG_M1_147

DETAIL 1

SCALE 1:50

SECTION E-E

SCALE 1:25

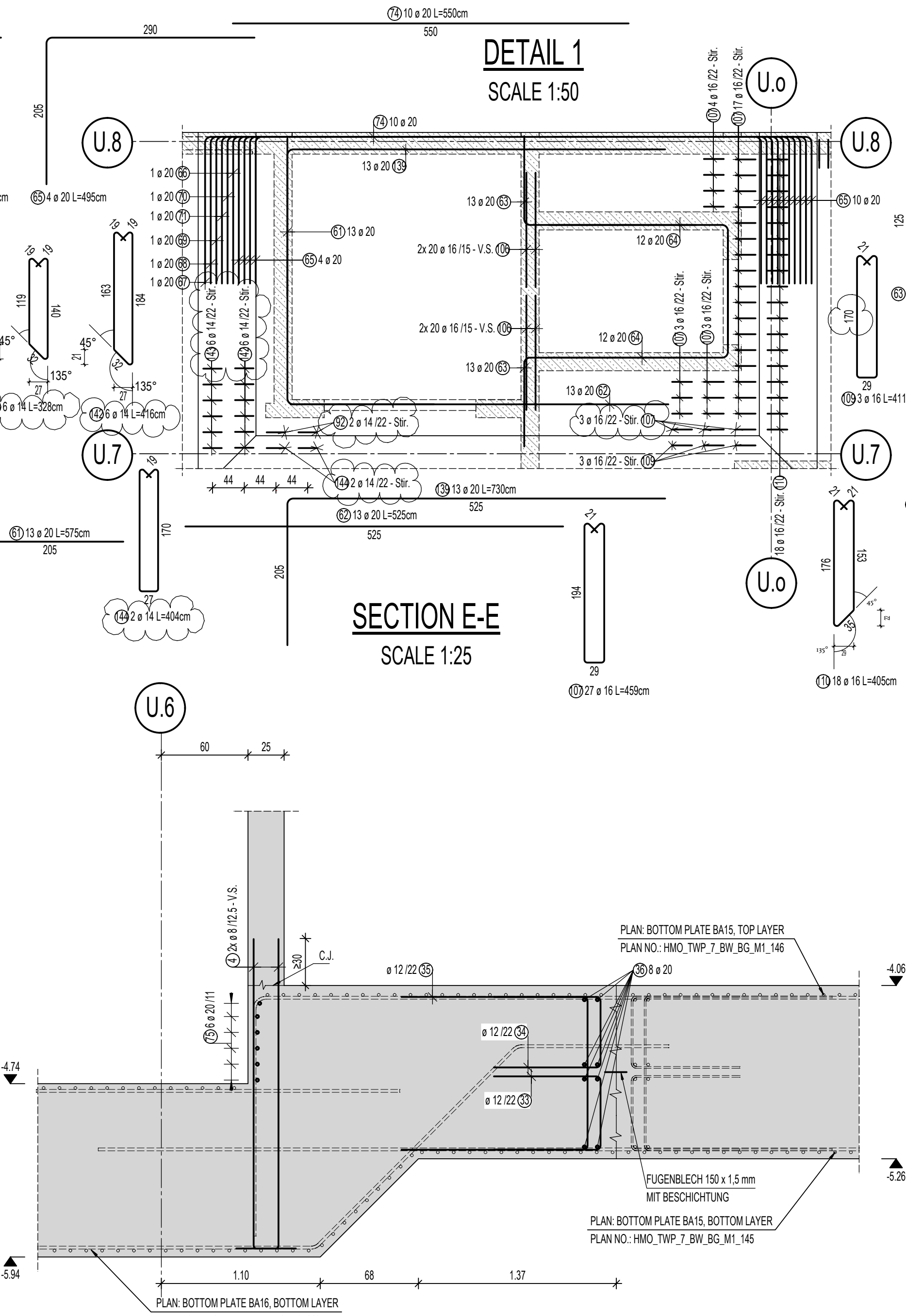

U.8
U.7
U.o
U.6
PLAN: BOTTOM PLATE BA16, TOP LAYER
PLAN: BOTTOM PLATE BA16, BOTTOM LAYER
FUGENBLECH 150 x 1,5 mm MIT BESCHICHTUNG
-4.74
-5.94

DETAIL 2

SCALE 1:50

DETAIL 3

SCALE 1:50

DETAIL 4

SCALE 1:50

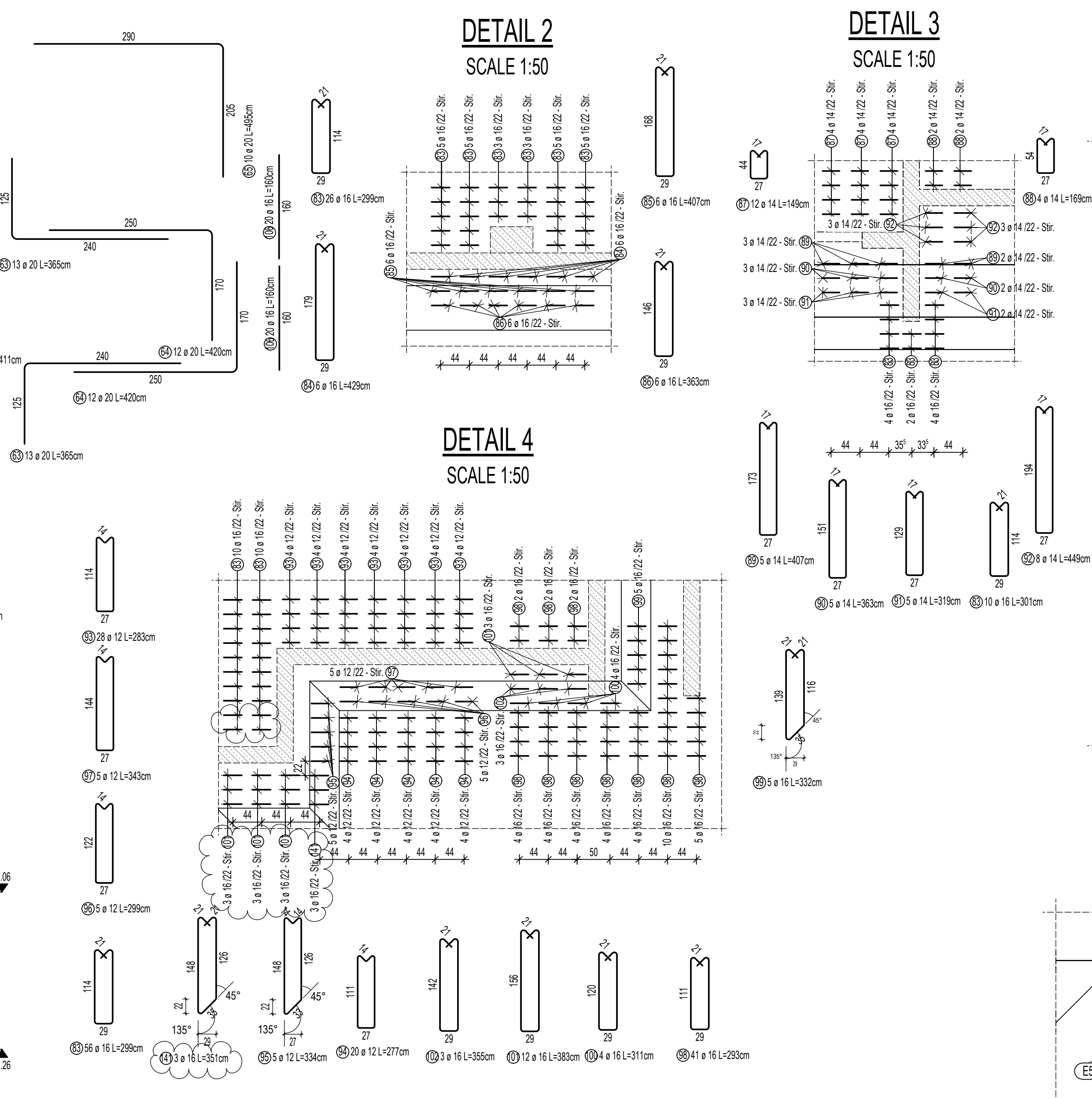

DETAIL 6

SCALE 1:25

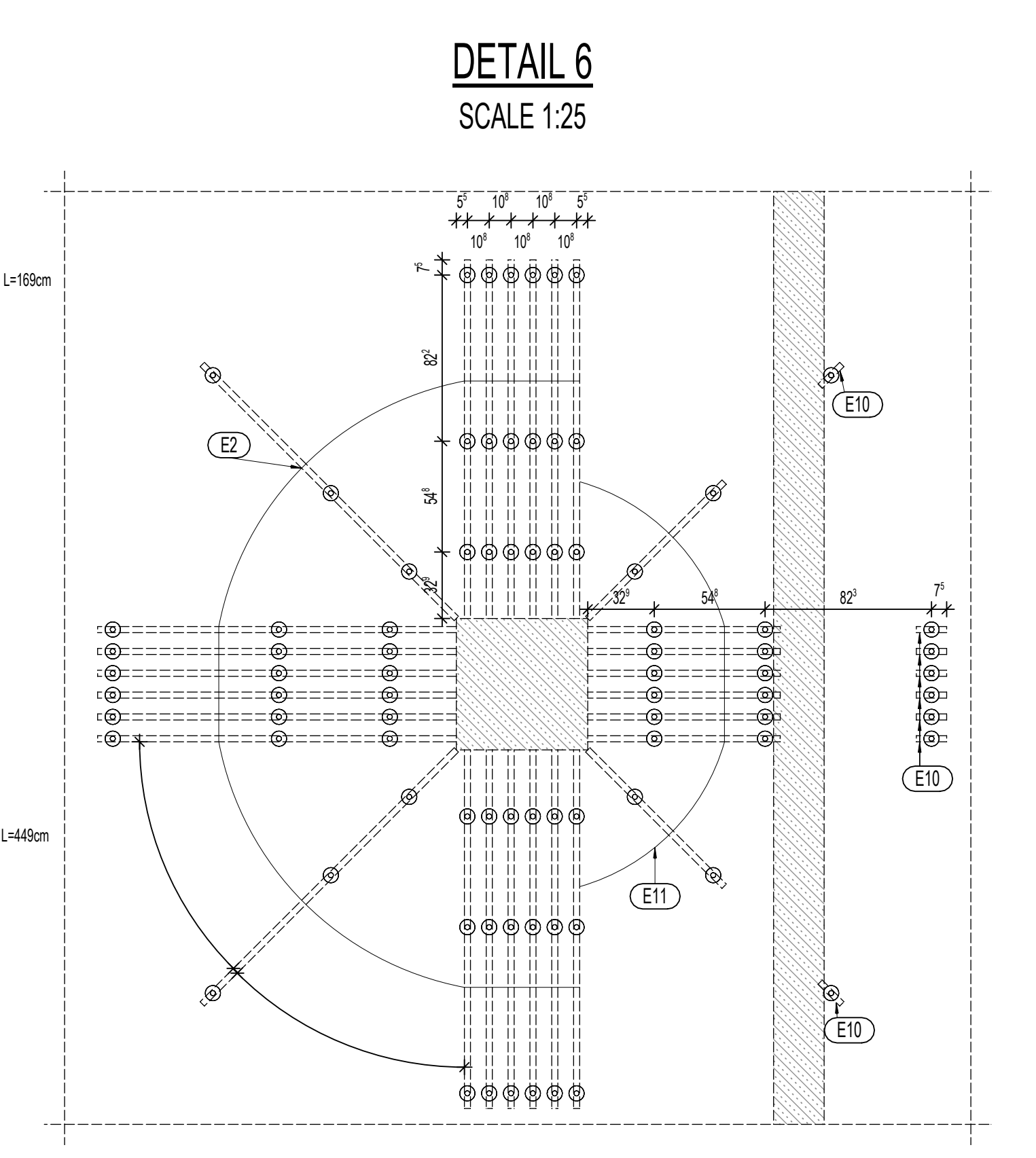

DETAIL 5

SCALE 1:25

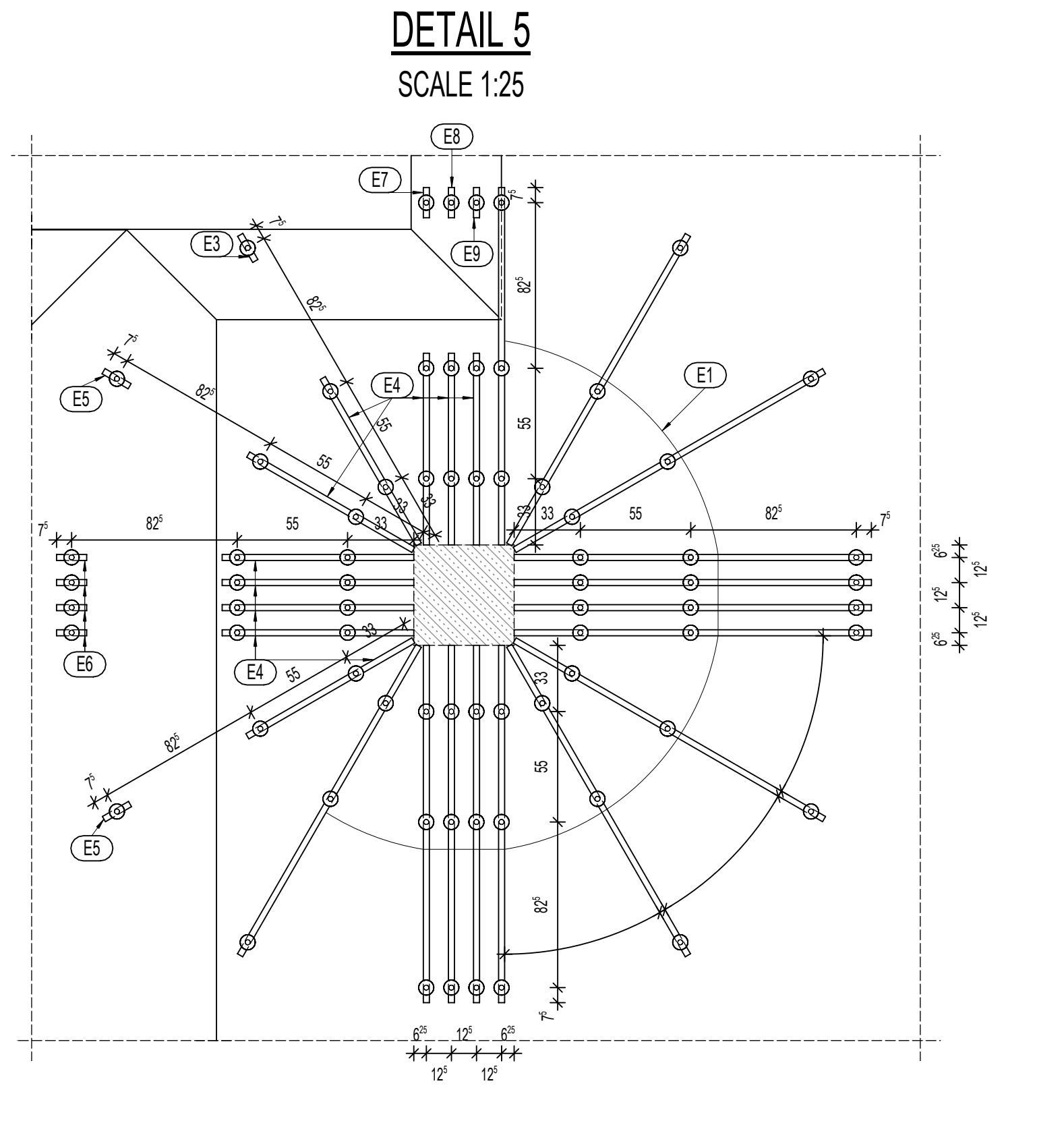

E3
E4
E5
E6
E7
E8
E9

SECTION D-D

SCALE 1:25

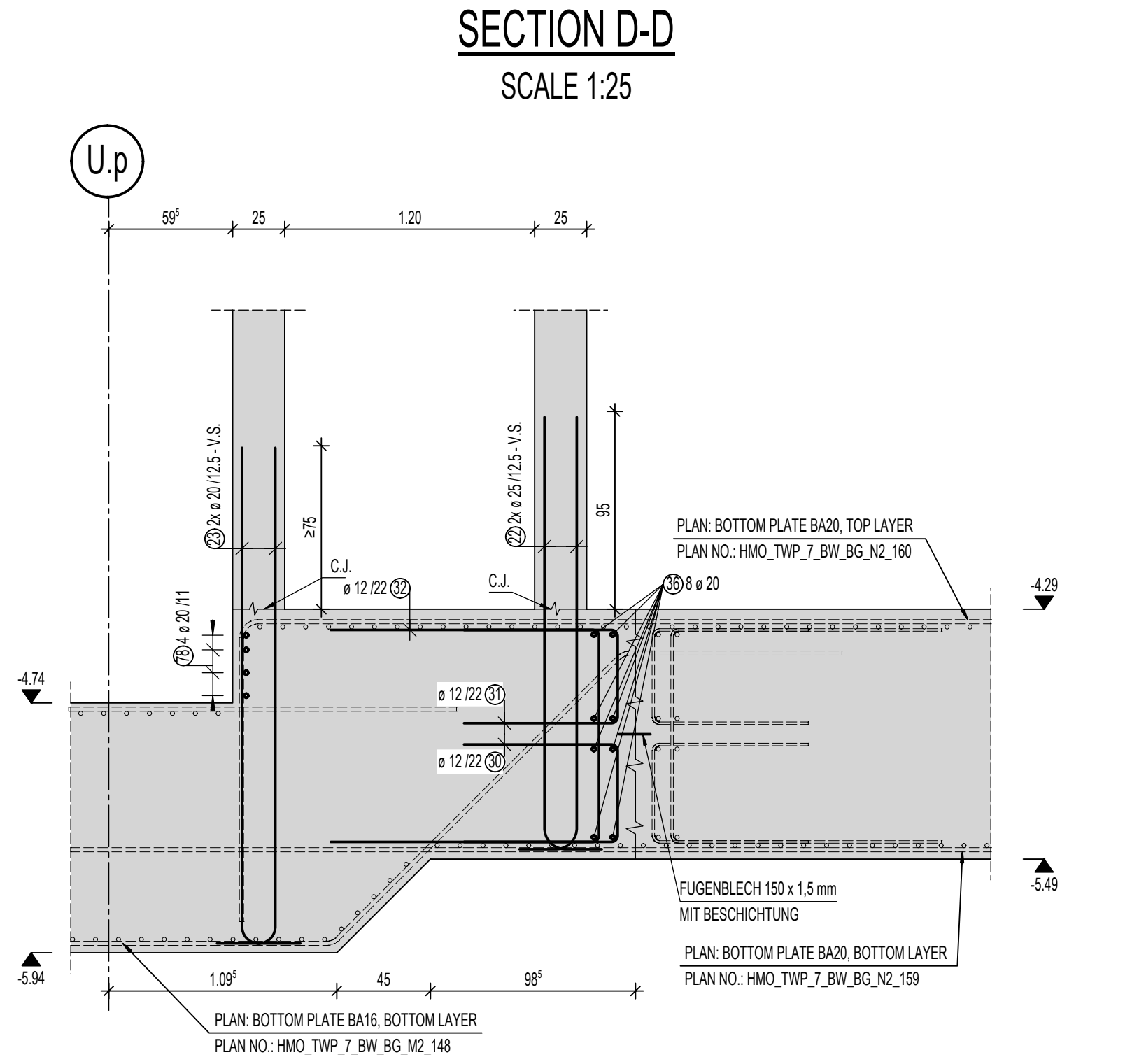

U.p
PLAN: BOTTOM PLATE BA16, TOP LAYER
PLAN: BOTTOM PLATE BA16, BOTTOM LAYER
FUGENBLECH 150 x 1,5 mm MIT BESCHICHTUNG
-4.74
-5.94

REGULAR DETAIL BOTTOM PLATE, DIRECTION X

SCALE 1:15

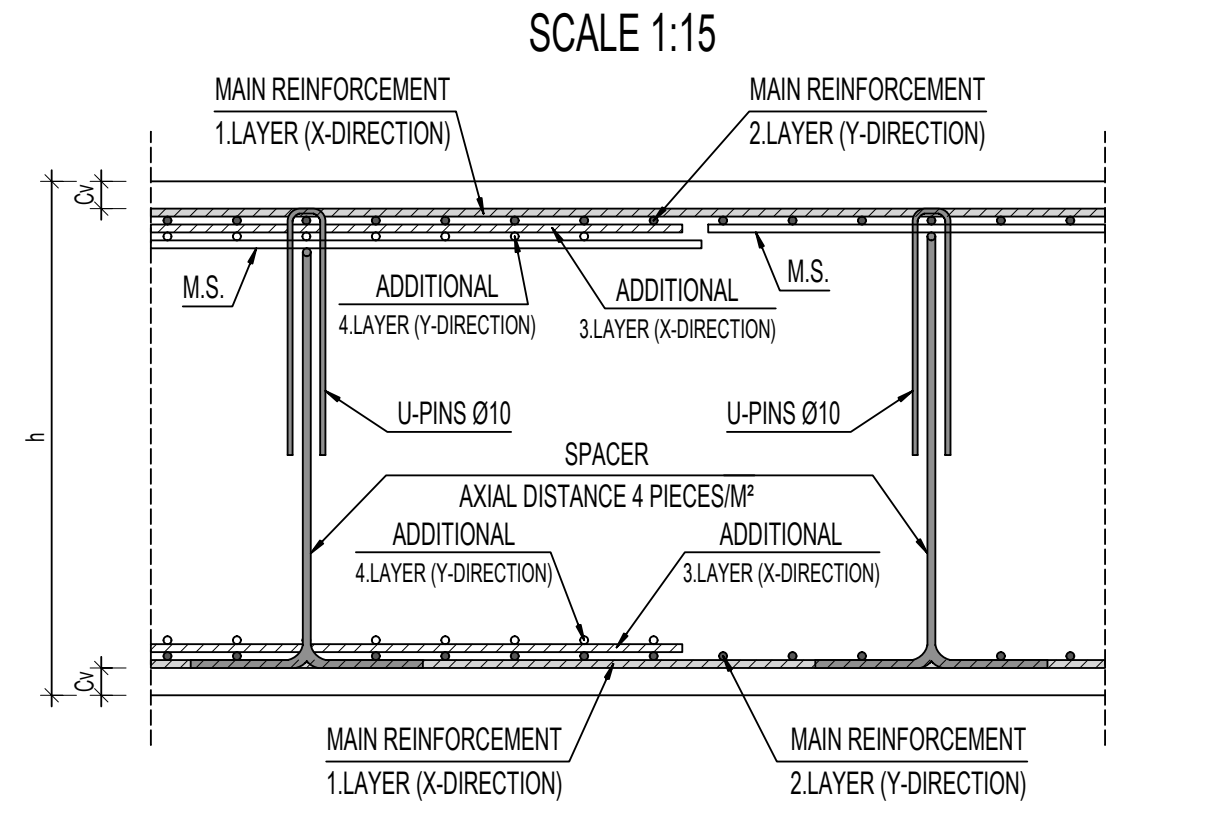

MAIN REINFORCEMENT 1.LAYER (X-DIRECTION)
MAIN REINFORCEMENT 2.LAYER (Y-DIRECTION)
ADDITIONAL 4.LAYER (Y-DIRECTION)
ADDITIONAL 3.LAYER (X-DIRECTION)
M.S.
U-PINS Ø10
SPACER
AXIAL DISTANCE 4 PIECES/M²

REGULAR DETAIL BOTTOM PLATE, DIRECTION Y

SCALE 1:15

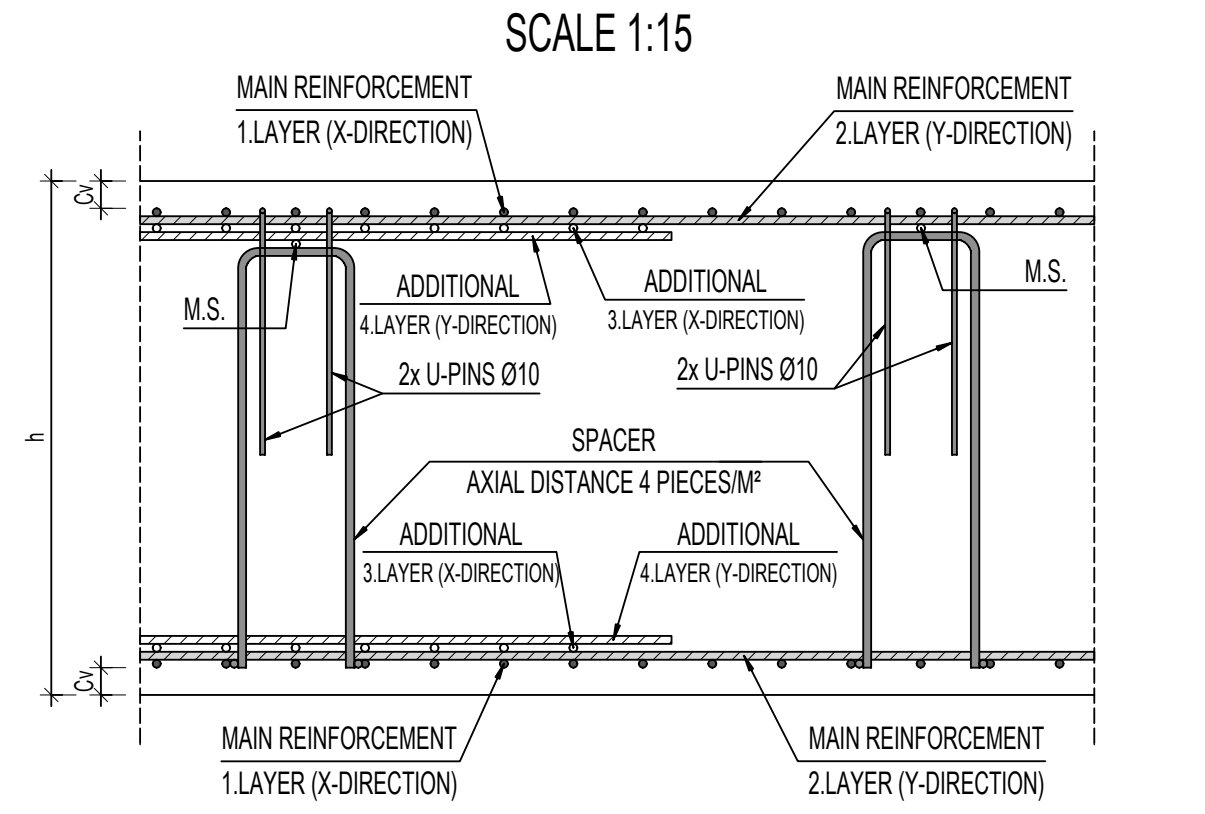

MAIN REINFORCEMENT 1.LAYER (X-DIRECTION)
MAIN REINFORCEMENT 2.LAYER (Y-DIRECTION)
ADDITIONAL 3.LAYER (X-DIRECTION)
ADDITIONAL 4.LAYER (Y-DIRECTION)
M.S.
2x U-PINS Ø10
SPACER
AXIAL DISTANCE 4 PIECES/M²

DETAIL OF WATERSTOP IN OUTSIDE WALLS

SCALE 1:25

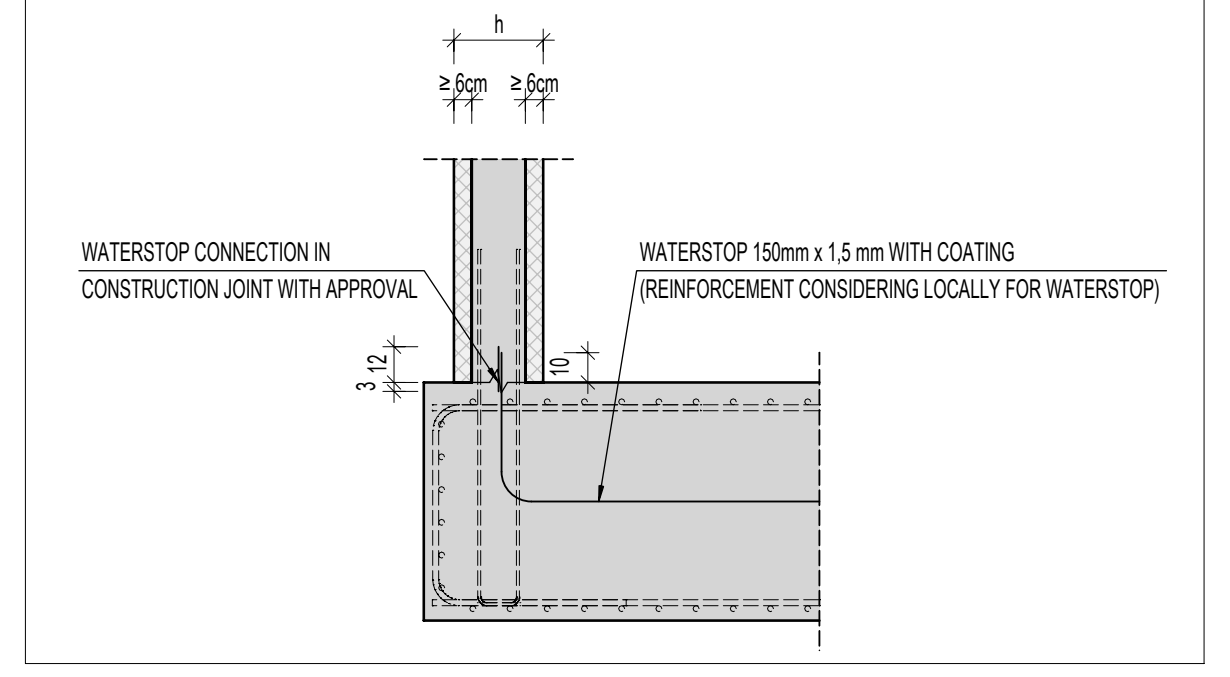

h
≥ 6cm
WATERSTOP CONNECTION IN CONSTRUCTION JOINT WITH APPROVAL
WATERSTOP 150mm x 1,5 mm WITH COATING (REINFORCEMENT CONSIDERING LOCALLY FOR WATERSTOP)

DETAIL OF OUTSIDE WALLS

SCALE 1:25

DETAIL OF INSIDE WALLS

SCALE 1:25

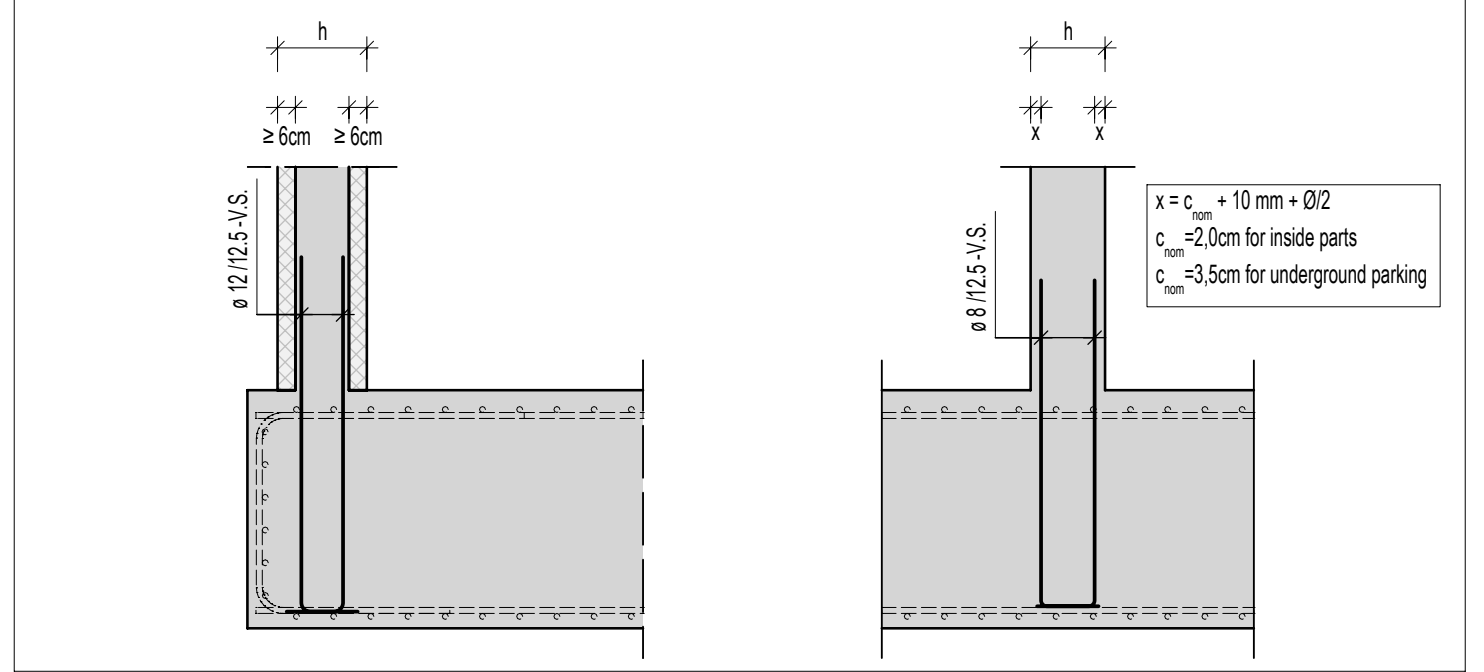

h
≥ 6cm
x
ø 12 /12.5 -V.S.
ø 8 /12.5 -V.S.

x = c_{nom} + 10 mm + Ø/2
c_{nom}=2,0cm for inside parts
c_{nom}=3,5cm for underground parking

POS	HDB	Pieces
E1	HDB-25/1105-3/1780 (330/550/825/75)	14
E2	HDB-25/1105-3/1776 (329/548/823/75)	20
E3	HDB-25/1435-1/150 (75/75)-SK	1
E4	HDB-25/1105-2/955 (330/550/75)-SK	10
E5	HDB-25/1615-1/150 (75/75)-SK	2
E6	HDB-25/1865-1/150 (75/75)-SK	4
E7	HDB-25/1485-1/150 (75/75)-SK	1
E8	HDB-25/1355-1/150 (75/75)-SK	1
E9	HDB-25/1235-1/150 (75/75)-SK	1
E10	HDB-25/1785-3/150 (75/75)-SK	8
E11	HDB-25/1105-3/952 (329/548/75)-SK	8

SECTION A-A

SCALE 1:25

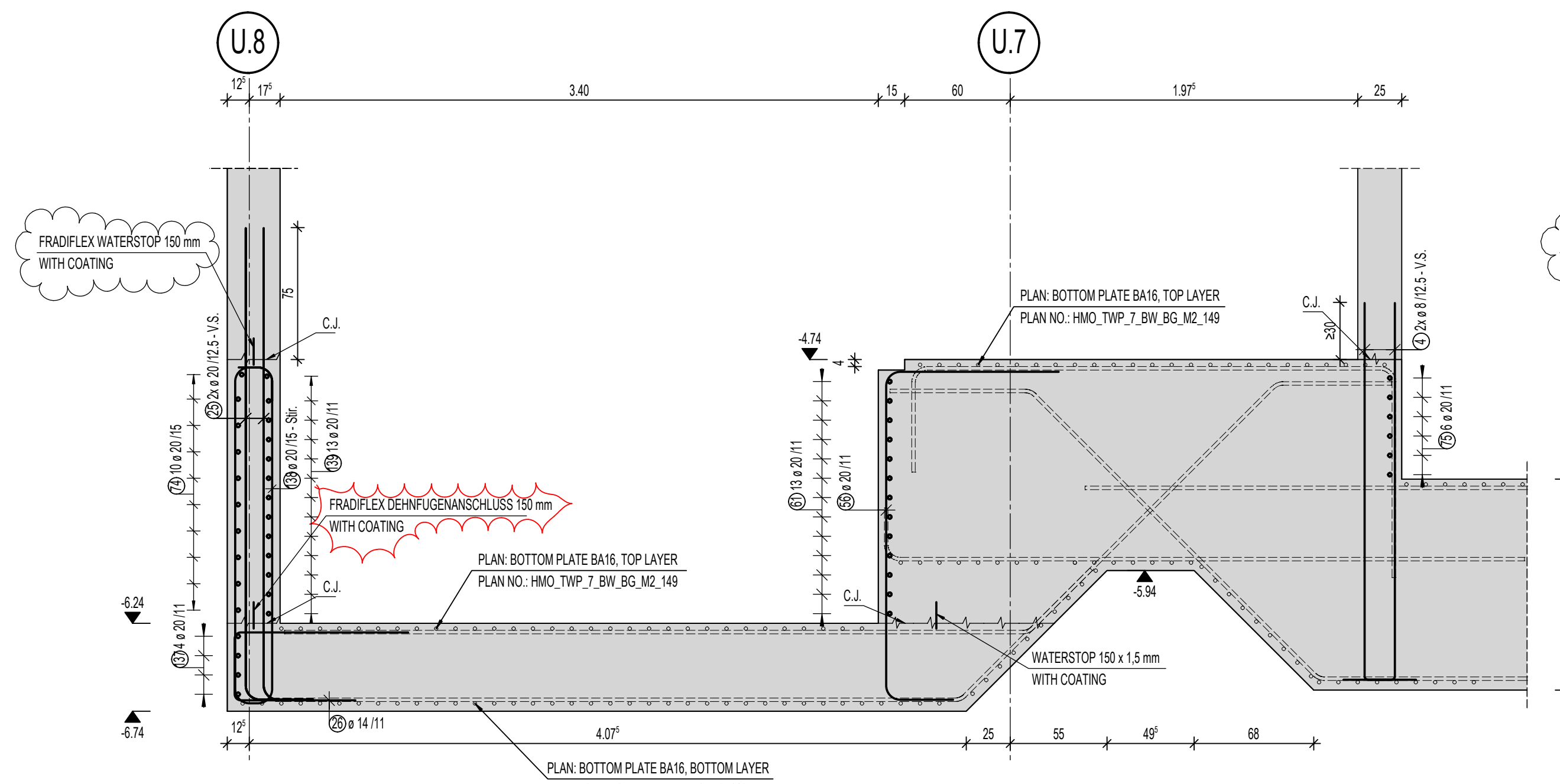

U.8
U.7
FRADIFLEX WATERSTOP 150 mm WITH COATING
PLAN: BOTTOM PLATE BA16, TOP LAYER
PLAN NO.: HMO_TWP_7_BW_BG_M2_149
PLAN: BOTTOM PLATE BA16, BOTTOM LAYER
PLAN NO.: HMO_TWP_7_BW_BG_M2_148
WATERSTOP 150 x 1.5 mm WITH COATING
-4.74
-5.94

SECTION B-B

SCALE 1:25

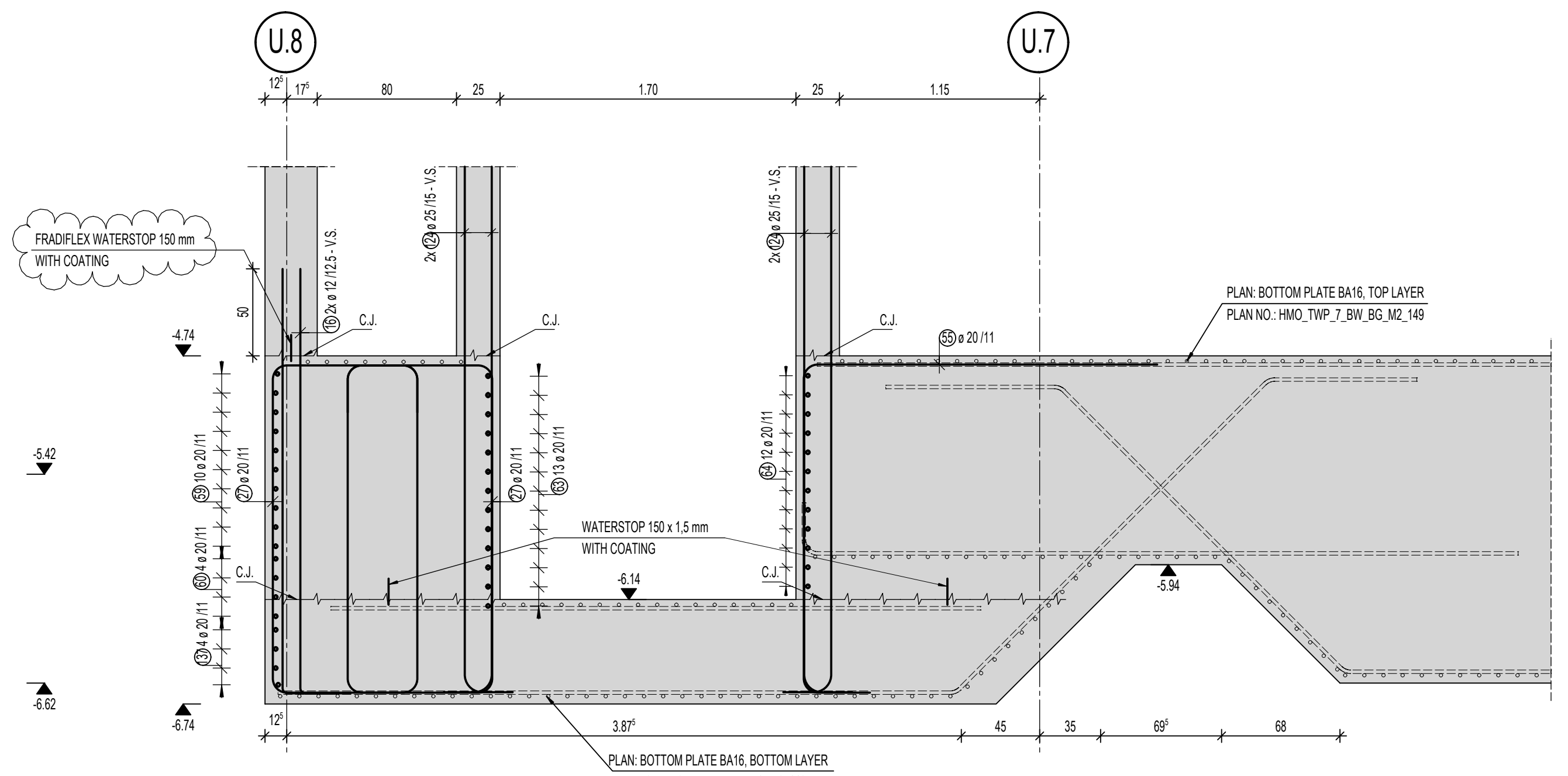

U.8
U.7
FRADIFLEX WATERSTOP 150 mm WITH COATING
PLAN: BOTTOM PLATE BA16, TOP LAYER
PLAN NO.: HMO_TWP_7_BW_BG_M2_149
PLAN: BOTTOM PLATE BA16, BOTTOM LAYER
PLAN NO.: HMO_TWP_7_BW_BG_M2_148
WATERSTOP 150 x 1.5 mm WITH COATING
-4.74
-5.94

SECTION C-C

SCALE 1:25

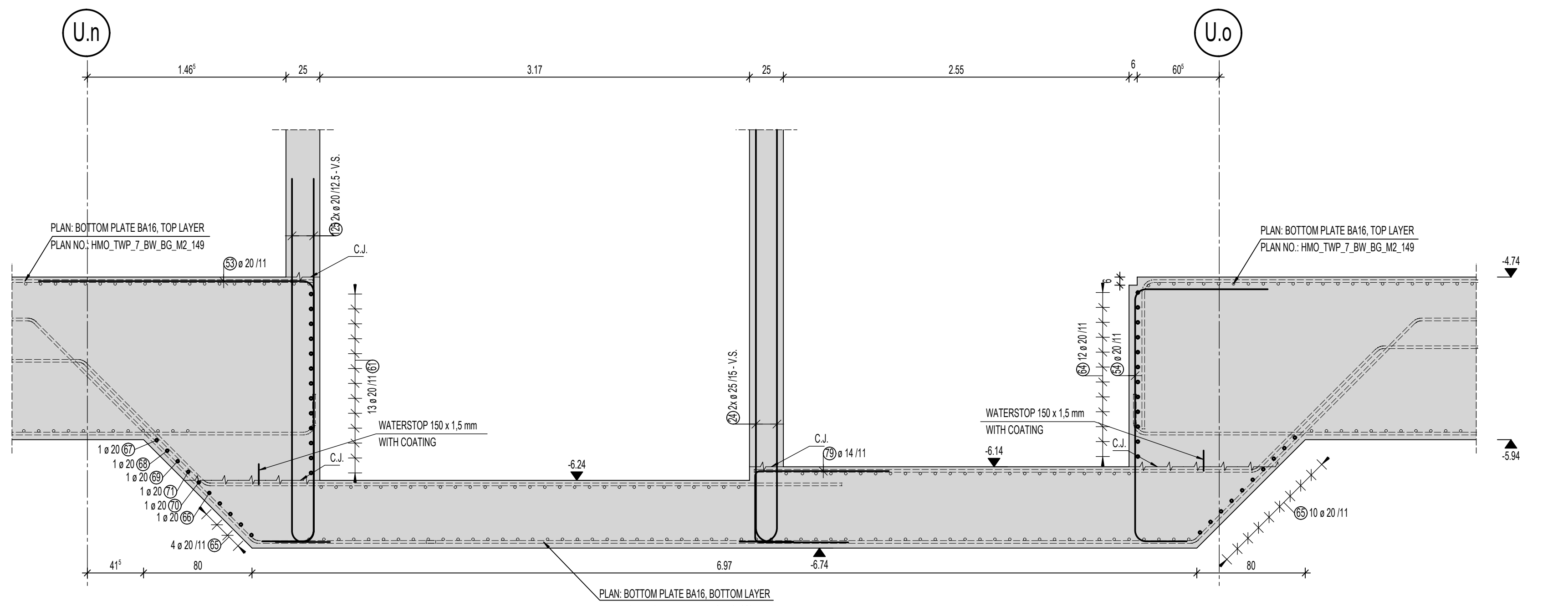

U.n
U.o
PLAN: BOTTOM PLATE BA16, TOP LAYER
PLAN: BOTTOM PLATE BA16, BOTTOM LAYER
PLAN NO.: HMO_TWP_7_BW_BG_M2_148
WATERSTOP 150 x 1.5 mm WITH COATING
-4.74
-5.94

Ø [mm]	Bond conditions	C30/37		C35/45	
		l_{bd} ≥	l_0 ≥	l_{bd} ≥	l_0 ≥
	[-]	[cm]	[cm]	[cm]	[cm]
8	Poor	45	85	40	75
	Good	30	60	30	55
10	Poor	55	105	50	95
	Good	40	75	35	65
12	Poor	65	125	55	110
	Good	45	90	40	80
14	Poor	75	145	65	130
	Good	50	100	45	90
16	Poor	85	165	75	150
	Good	60	120	55	105
20	Poor	105	205	95	185
	Good	75	145	65	130
25	Poor	130	260	115	230
	Good	90	180	85	165
28	Poor	145	290	130	260
	Good	100	200	90	180

OVERLAPPING LENGTH OF WALLS AND COLUMNS REINFORCEMENT

Ø	C30/37	C35/45	C50/60
	l_0 ≥	l_0 ≥	l_0 ≥
[mm]	[cm]	[cm]	[cm]
8	30	30	20
10	40	35	25
12	45	40	35
14	50	45	40
16	60	55	45
20	75	65	55
25	90	85	65
28	100	90	75

Minimum values of the bending roll diameter Dmin for bending bars once — BS EN 1992-1-1 Tab. 8.1 BS a)

	Hooks, angled hooks, Loops [D_{min}]		Inclined bars or other bent bars [D_{min}]		
	Bar Diameter ø		Minimum values of the concrete cover perpendicular to the curvature plane		
	< 20 mm	≥ 20 mm	> 100 mm > 7 ø	> 50 mm > 3 ø	≤ 50 mm ≤ 3 ø
Normal concrete	4 ø	7 ø	10 ø	15 ø*	20 ø

* If the value "Dmin = 15 x Ø" applied, it should be shown in bending steel list.

Minimum values of the bending roll diameter Dmin for welded bent reinforcement and mesh bent after welding. — BS EN 1992-1-1 Tab. 8.1 BS b)

	Predominantly stationary effects		Predominantly non-stationary effects	
	Welding outside the bending area	Welding inside the bending area	Welding on the outer side of the bend	Welding on the inner side of the bend
for a < 4 ø	20 ø	20 ø	100 ø	500 ø
for a ≥ 4 ø	Value on Table 8.1 BS a)			

Component	Alignment	Concrete	Exposure Classes	c_{min} 3) [mm]	Δc_{def} [mm]	c_{nom} [mm]	Moistness	Water-proofing
Roofing	Top	C30/37	XC3	20	15	35	WO	2)
	Bottom		XC1	10	10	20	WO	-
Slab above floors	Top/Bottom	C30/37	XC1	10	10	20	WO	-
	Bottom (Parking)							
Slab above underground parking	Top (Soil)	C30/37	XC3	20	15	35	WO	2)
	Top		XC1	10	10	20	WO	-
	Bottom (Parking)		XC3, XF1	20	15	35	WF	-
Stairs	Top/Bottom	C20/25	XC1	10	10	20	WO	-
Walls / Columns	Inside	C30/37 (WP) - C50/60	XC1	10	10	20	WO	-
	Outside		XC1	10	10	20	WO	-
	Outside, Soil		XC2, XF1	20	15	35	WF	-
	Parking		XC3, XF2	20	15	35	WF	(Pic. 10) 1)
Bottom plate under basement	Top	C30/37-C35/45 WP	XC1	10	10	20	WO	-
	Bottom (Soil)		XC2, XA1, XF1	15-20	15	30-35	WF	-
Bottom plate under parking	Top (Parking)	C30/37-C35/45 WP	XC3, XD1, XF1	40	15	55	WF	B1 1)
	Bottom (Soil)		XC2, XA1, XF1	15-20	15	30-35	WF	-
Ramps	Top	C35/45	XC3, XD3, XF2	40	15	55	WF	B1/C1 1)
	Bottom		XC3, XF1	20	15	35	WF	-
Elevator pits	Inside, Top	C30/37 WP	XC1	10	10	20	WO	-
	Outside, Bottom		XC2, XA1, XF1	20	15	35	WF	-
Steel grade	B 500 A							

1) Waterproofing in accordance with DBV leaflet "Car parks and underground car parks" from 2018, with maintenance plan and Repair of cracks and defects. Locally occurring cracks must be permanently closed by suitable measures

2) Black waterproofing in accordance with BS 18531/18532 and DBV leaflet as specified by the architect

3) For XC2+XC3, reduce by 5mm due to 2 strength classes above C20/25.

Observe bond strength

A coefficient of friction of μ=0.60 was used to determine the crack width-limiting reinforcement of the floor slab and a concrete with slow strength development was assumed (r ≤ 0.3, factor 0.85), which reaches around 70% of the tensile strength after 7 days ($f_{ct,eff}$=0.85 x 0.70f_{ctm} for slow hardening). The average strength development of the concrete is assumed for the other components ($f_{ct,eff}$ ≥ 0.70f_{ctm} for normal hardening).

General notes:

- All construction joints must be rough in accordance with BS EN 1992-1-1, Section 6.2.5 (unless otherwise specified)
- All dimensions of the reinforcing steel are external dimensions
- U-locks must always be offset (unless otherwise specified)
- The specified concrete covers must be observed. The reinforcement must be installed in such a way that its position is secured. (see BS EN 13670 in conjunction with BS 1054-3 Chapter 2.6.5 or DBV leaflet on concrete cover and reinforcement)
- The reinforcement is installed according to layers and not according to item numbers

Abbreviation

V.S. - Vertical starter
H.S. - Horizontal starter
Top. - Top layer
Bot. - Bottom layer
Add. - Additional reinforcement
Stir. - Stirrup
M.S. - Mounting spacer
C.J. - Construction joint
WS. - Waterstop
WP - Waterproof

Legend:

Index cloud
Clearing cloud

Notice :
Please apply low-shrinkage, slow-hardening for Waterproof (WP) concrete in construction

MATERIALS/COMPONENT

Reinforced Concrete
Masonry
Unreinforced Concrete
Non-load bearing walls
Prefabricated elements
Upper reinforced concrete components
Construction joint

Related plans:

Reinforcement plans number:
HMO_TWP_7_BW_BG_M2_139
HMO_TWP_7_BW_BG_M2_140
HMO_TWP_7_BW_BG_M2_141
HMO_TWP_7_BW_BG_M2_148
HMO_TWP_7_BW_BG_M2_149
HMO_TWP_7_BW_BG_M1_145
HMO_TWP_7_BW_BG_M1_146
HMO_TWP_7_BW_BG_M1_147
HMO_TWP_7_BW_BG_N2_159
HMO_TWP_7_BW_BG_N2_160

REV.	DESCRIPTION	DATE
-	First delivery	19.07.2019
1	Approval with comments.	26.08.2019
2	Reinforcement adding / adjusting.	01.11.2019
3	Approval with comments. Following the formwork plan changing.	28.11.2019

Project	Stage	Phase	Type	Level	Component	Plan number	Index	Status
HMO	TWP	7	BW	BG	M2	150	3	F

EXECUTION PLANNING

Builder

General contractor

Plan author

Specialist planner

Project
HBF Münster Ostseite

Reference plan / external reference

Overview Plan

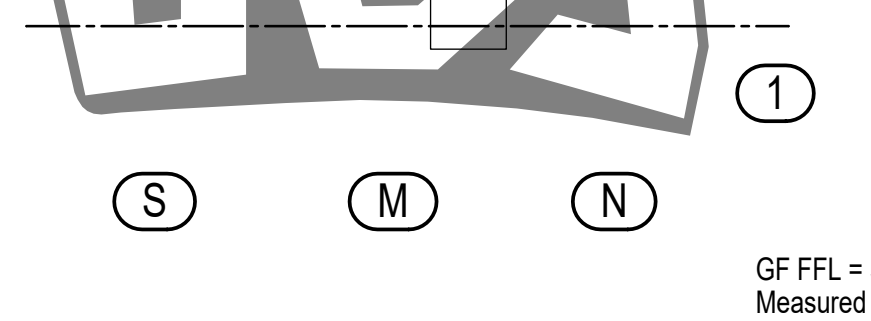

Norden
2
1
S
M
N

GF FFL = 59,02 m AMSL
Measured water level = 57,00 m AMSL
AMSL - Above mean sea level

Plan content
BOTTOM PLATE BA16; SIDE AND STARTER REINFORCEMENT COMPONENT MIDDLE 2

Plan author: HCE
Date: 19.07.2019
Rev.: 3
Scale: 1:50
Filename: HMO_TWP_7_BW_BG_M2_150_3_F

H/B = 841 / 1700 (1.43m²)

Allplan 2022

BOTTOM PLATE BA16; MAIN REINFORCEMENT; BOTTOM LAYER

GRID U.n-U.p/U.6-U.8

C30/37, $c_{v,top}$=2.0-5.5cm, $c_{v,bottom}$=3.5cm

SCALE 1:50

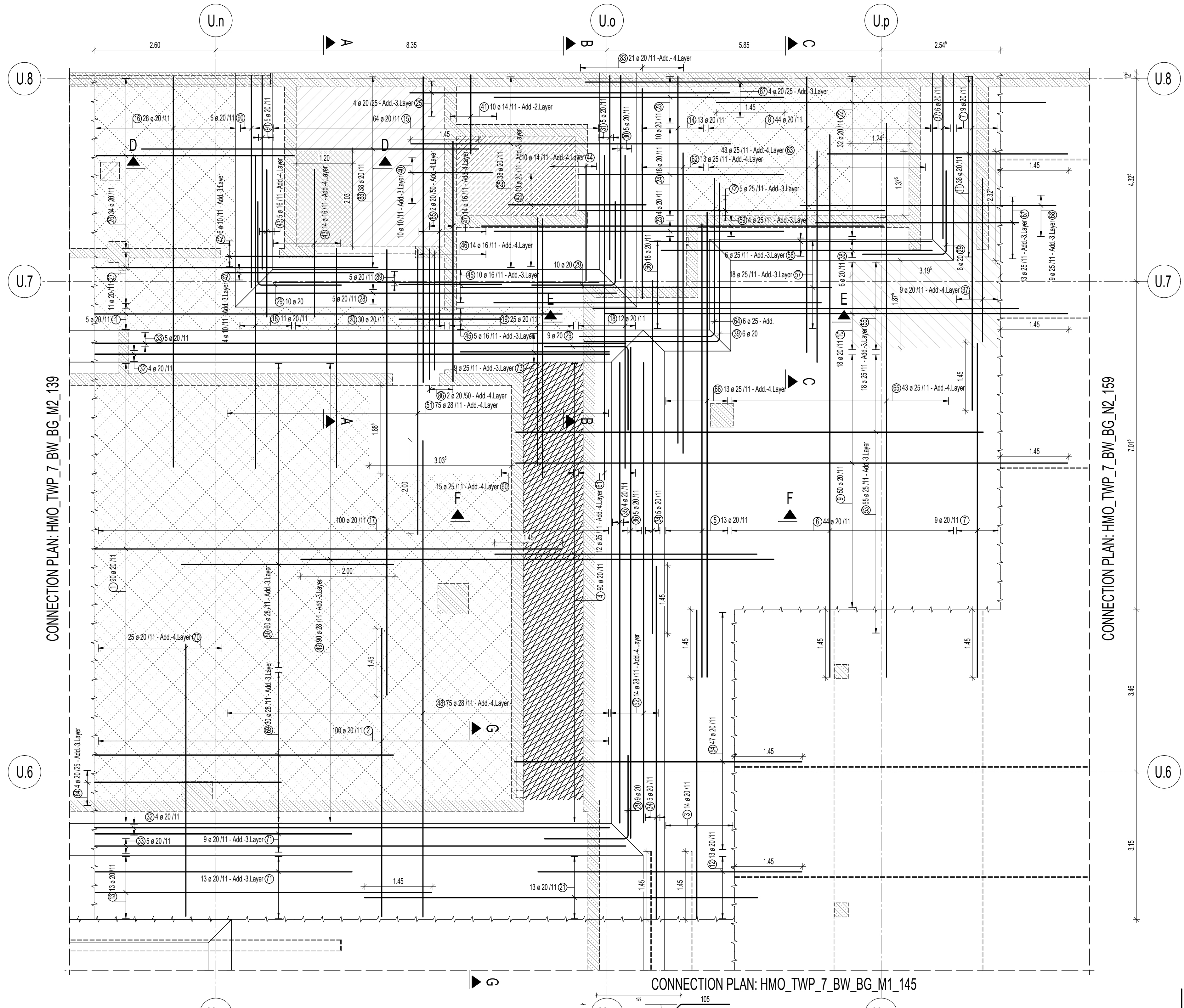
U.n
U.o
U.p
U.8
U.7
U.6
2.60
8.35
5.85
2.54
A
B
C
D
E
F
G
1. Layer
2. Layer
3. Layer
4. Layer
CONNECTION PLAN: HMO_TWP_7_BW_BG_M2_139
CONNECTION PLAN: HMO_TWP_7_BW_BG_N2_159
CONNECTION PLAN: HMO_TWP_7_BW_BG_M1_145

SPACER DETAIL

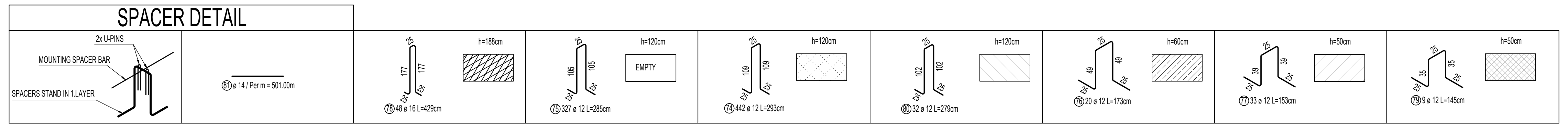
2x U-PINS
MOUNTING SPACER BAR
SPACERS STAND IN 1.LAYER
EMPTY

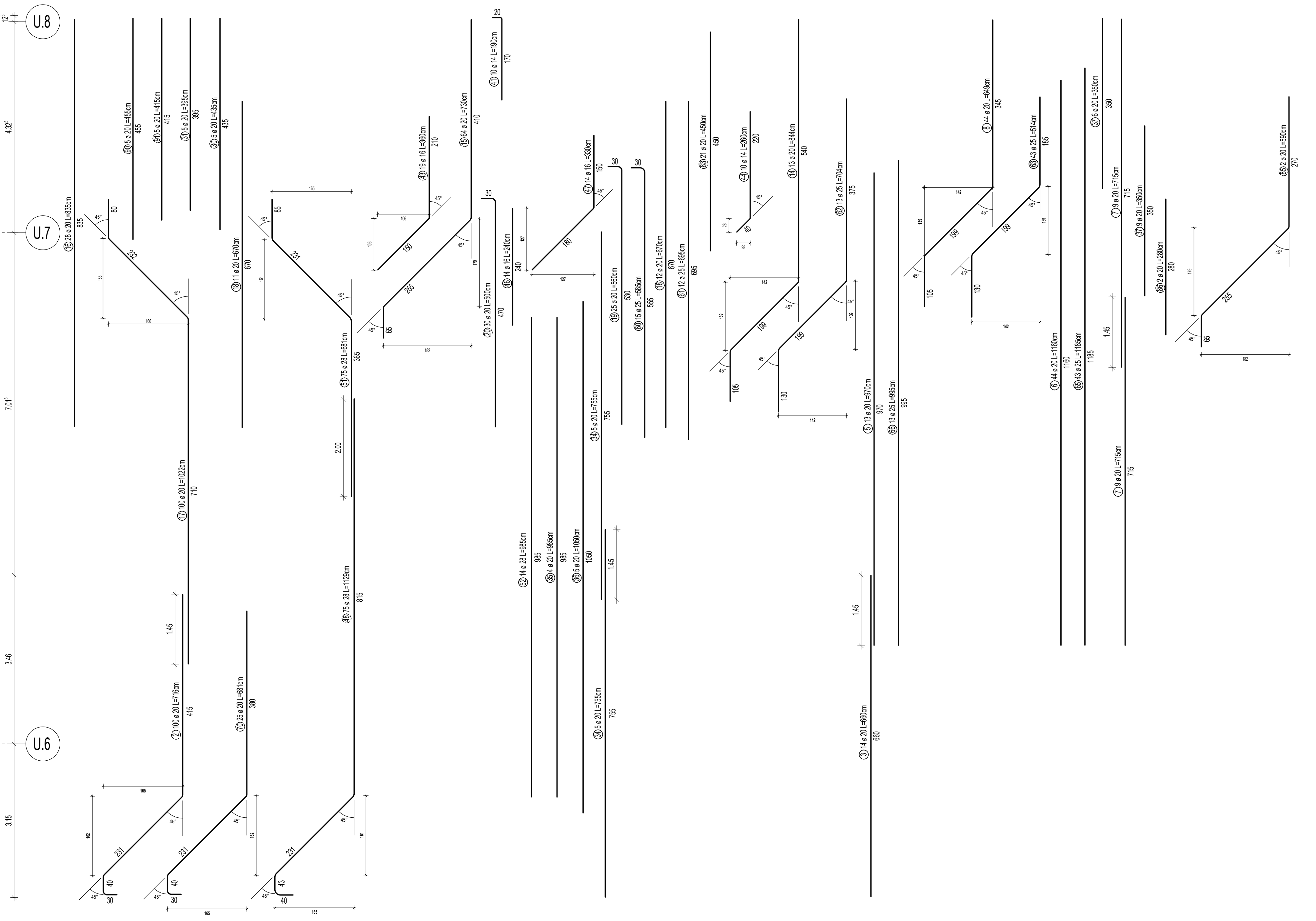

OVERLAPPING LENGTH OF WALLS AND COLUMNS REINFORCEMENT

Ø	C30/37	C35/45	C50/60
	$l_0 \geq$	$l_0 \geq$	$l_0 \geq$
[mm]	[cm]	[cm]	[cm]
8	30	30	20
10	40	35	25
12	45	40	35
14	50	45	40
16	60	55	45
20	75	65	55
25	90	85	65
28	100	90	75

Ø [mm]	Bond conditions	C30/37		C35/45	
		$l_{bd} \geq$	$l_0 \geq$	$l_{bd} \geq$	$l_0 \geq$
	[-]	[cm]	[cm]	[cm]	[cm]
8	Poor	45	85	40	75
	Good	30	60	30	55
10	Poor	55	105	50	95
	Good	40	75	35	65
12	Poor	65	125	55	110
	Good	45	90	40	80
14	Poor	75	145	65	130
	Good	50	100	45	90
16	Poor	85	165	75	150
	Good	60	120	55	105
20	Poor	105	205	95	185
	Good	75	145	65	130
25	Poor	130	260	115	230
	Good	90	180	85	165
28	Poor	145	290	130	260
	Good	100	200	90	180

DETAIL OF OUTSIDE WALLS

SCALE 1:25

DETAIL OF INSIDE WALLS

SCALE 1:25

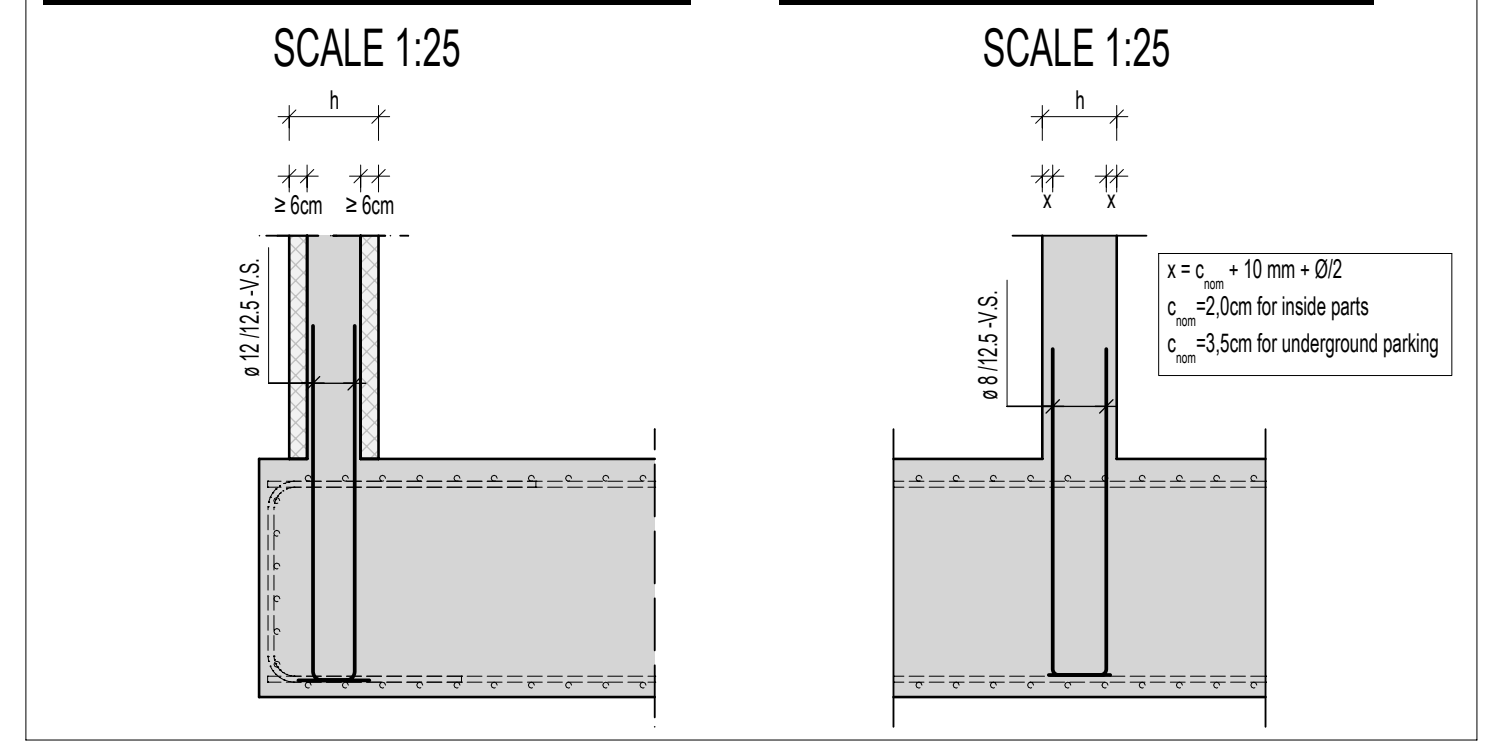

DETAIL OF WATERSTOP IN OUTSIDE WALLS

SCALE 1:25

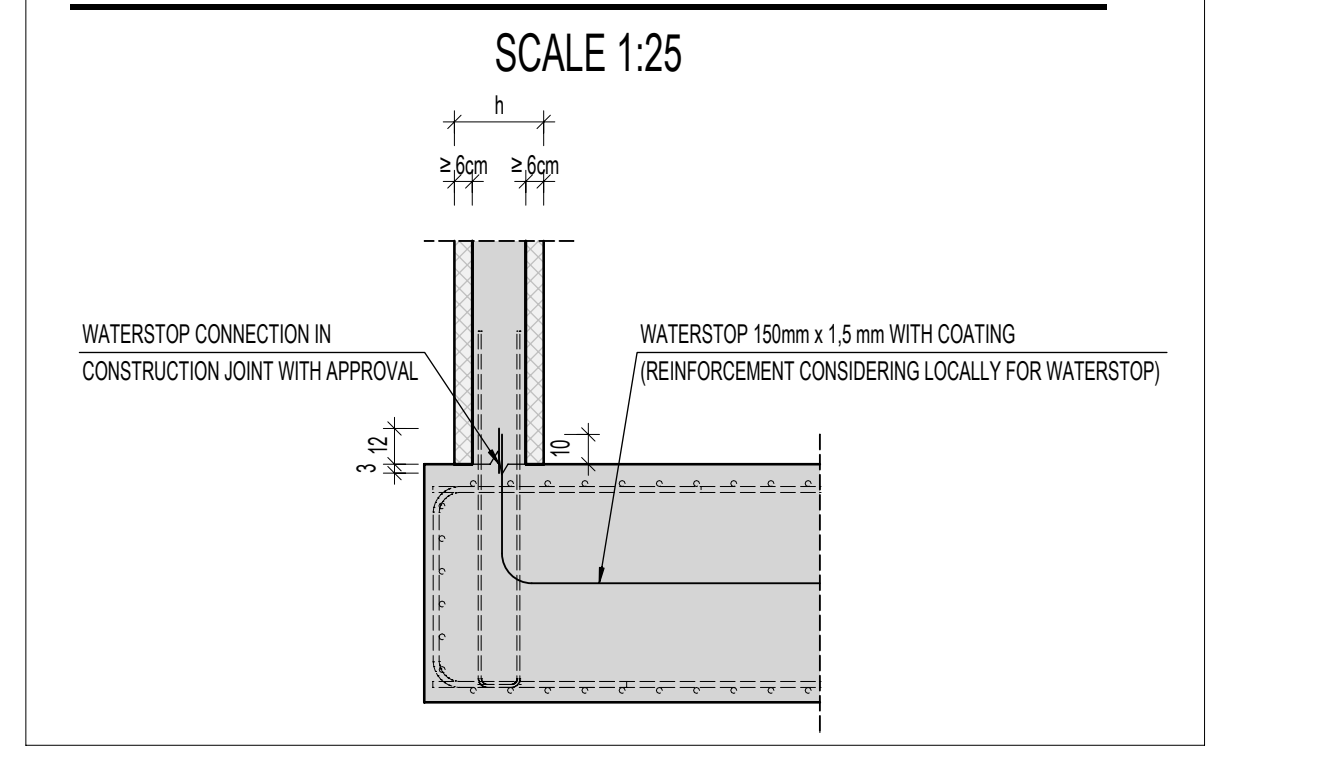
WATERSTOP CONNECTION IN CONSTRUCTION JOINT WITH APPROVAL
WATERSTOP 150mm x 1.5 mm WITH COATING (REINFORCEMENT CONSIDERING LOCALLY FOR WATERSTOP)

REGULAR DETAIL BOTTOM PLATE, DIRECTION X

SCALE 1:15

REGULAR DETAIL BOTTOM PLATE, DIRECTION Y

SCALE 1:15

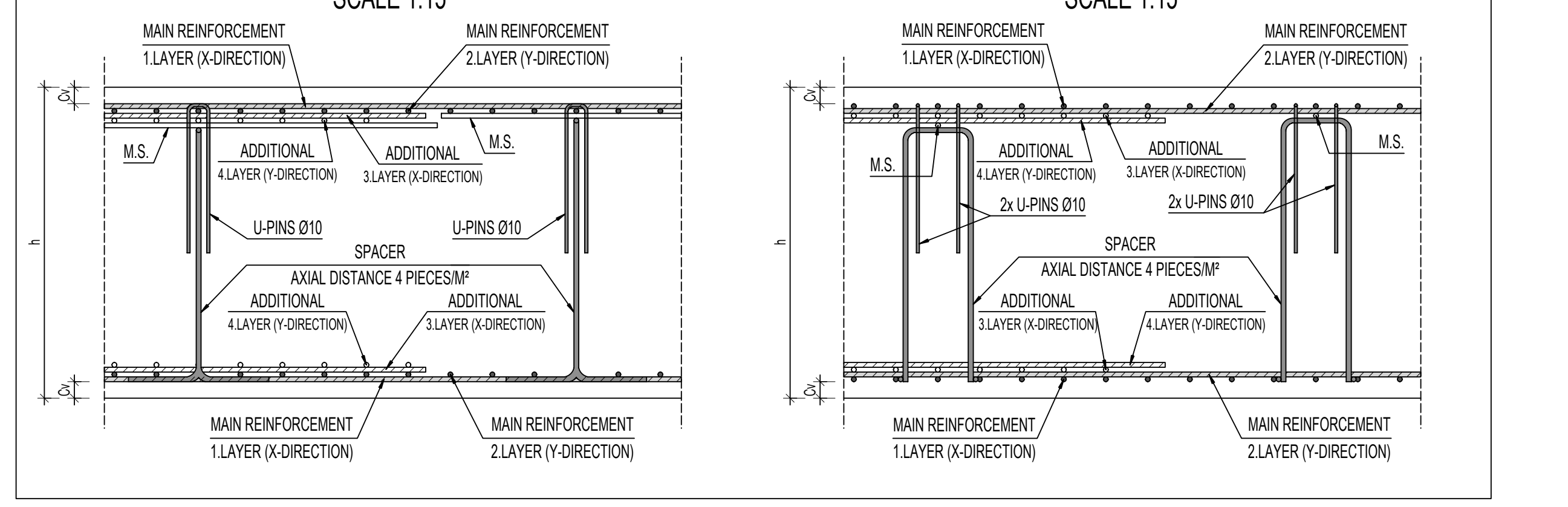
MAIN REINFORCEMENT 1.LAYER (X-DIRECTION)
MAIN REINFORCEMENT 2.LAYER (Y-DIRECTION)
ADDITIONAL 4.LAYER (Y-DIRECTION)
ADDITIONAL 3.LAYER (X-DIRECTION)
M.S.
U-PINS Ø10
2x U-PINS Ø10
SPACER
AXIAL DISTANCE 4 PIECES/M²
h
Cv

SECTION G-G

SCALE 1:25

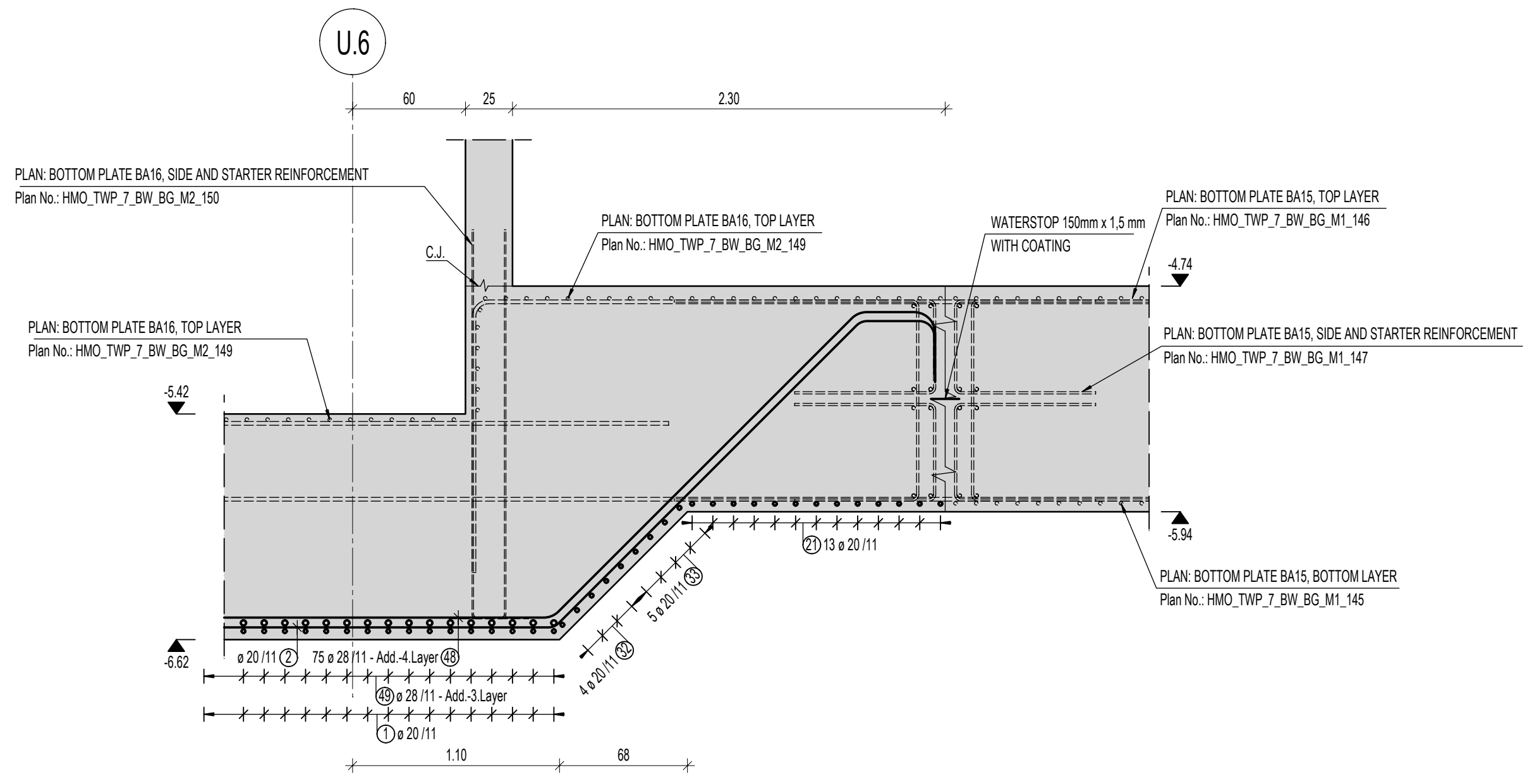
U.6
PLAN: BOTTOM PLATE BA16; SIDE AND STARTER REINFORCEMENT
Plan No.: HMO_TWP_7_BW_BG_M2_150
PLAN: BOTTOM PLATE BA16; TOP LAYER
Plan No.: HMO_TWP_7_BW_BG_M2_149
WATERSTOP 150mm x 1.5 mm WITH COATING
PLAN: BOTTOM PLATE BA16; TOP LAYER
Plan No.: HMO_TWP_7_BW_BG_M1_146
PLAN: BOTTOM PLATE BA16; SIDE AND STARTER REINFORCEMENT
Plan No.: HMO_TWP_7_BW_BG_M1_147
PLAN: BOTTOM PLATE BA16; BOTTOM LAYER
Plan No.: HMO_TWP_7_BW_BG_M1_145
C.J.
-4.74
-5.42
-5.94
-6.62

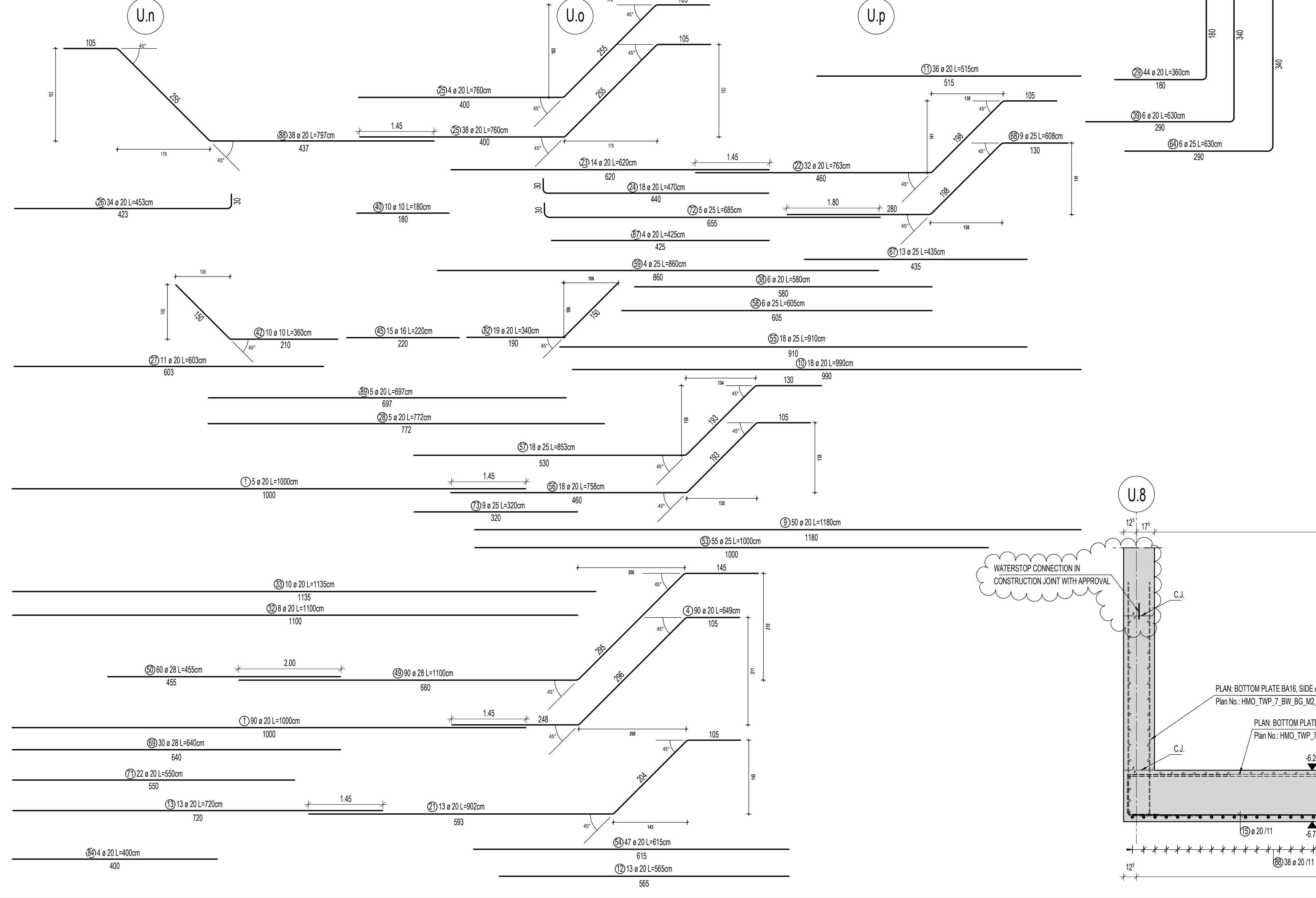

SECTION D-D

SCALE 1:25

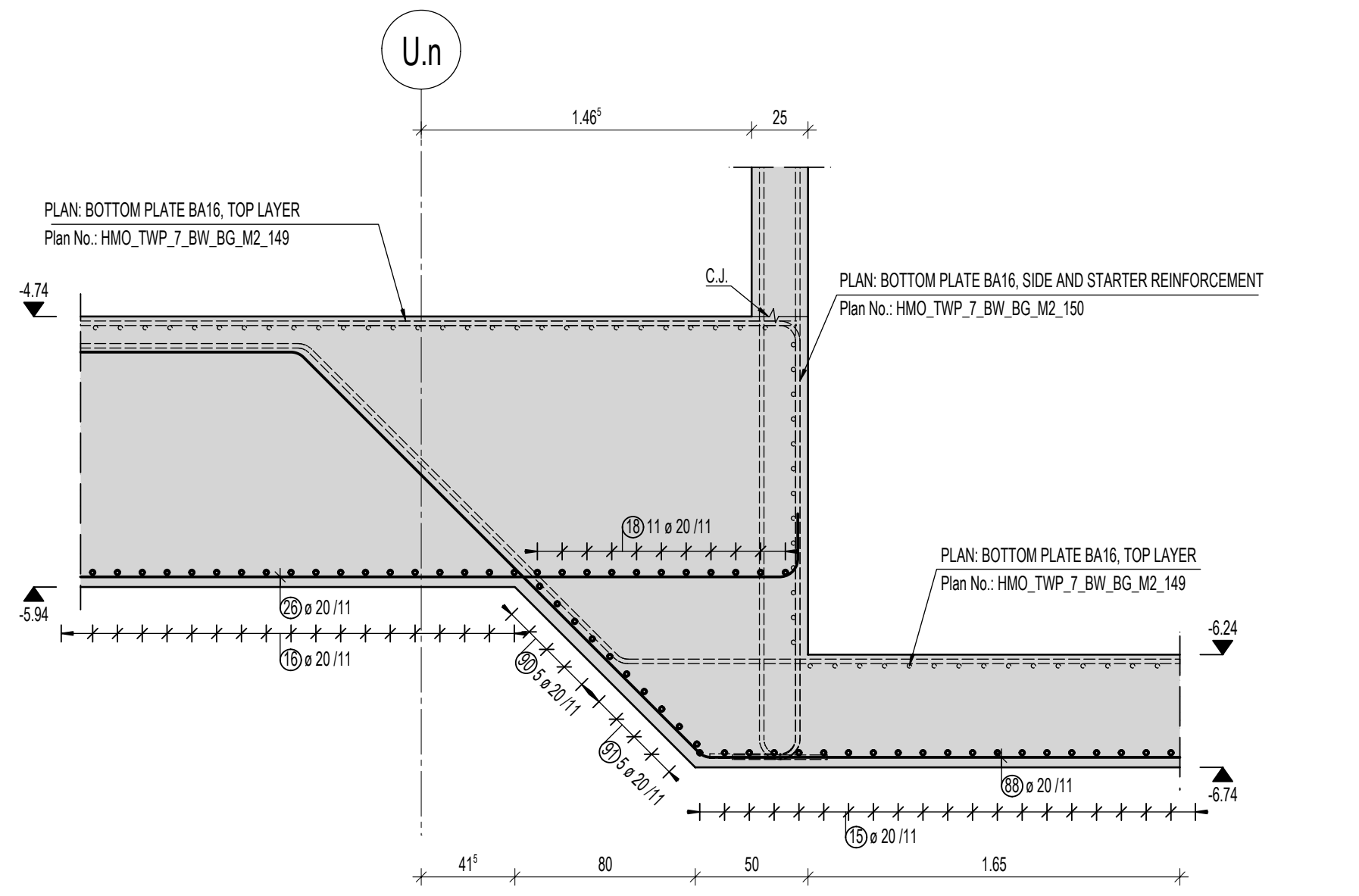

SECTION E-E

SCALE 1:25

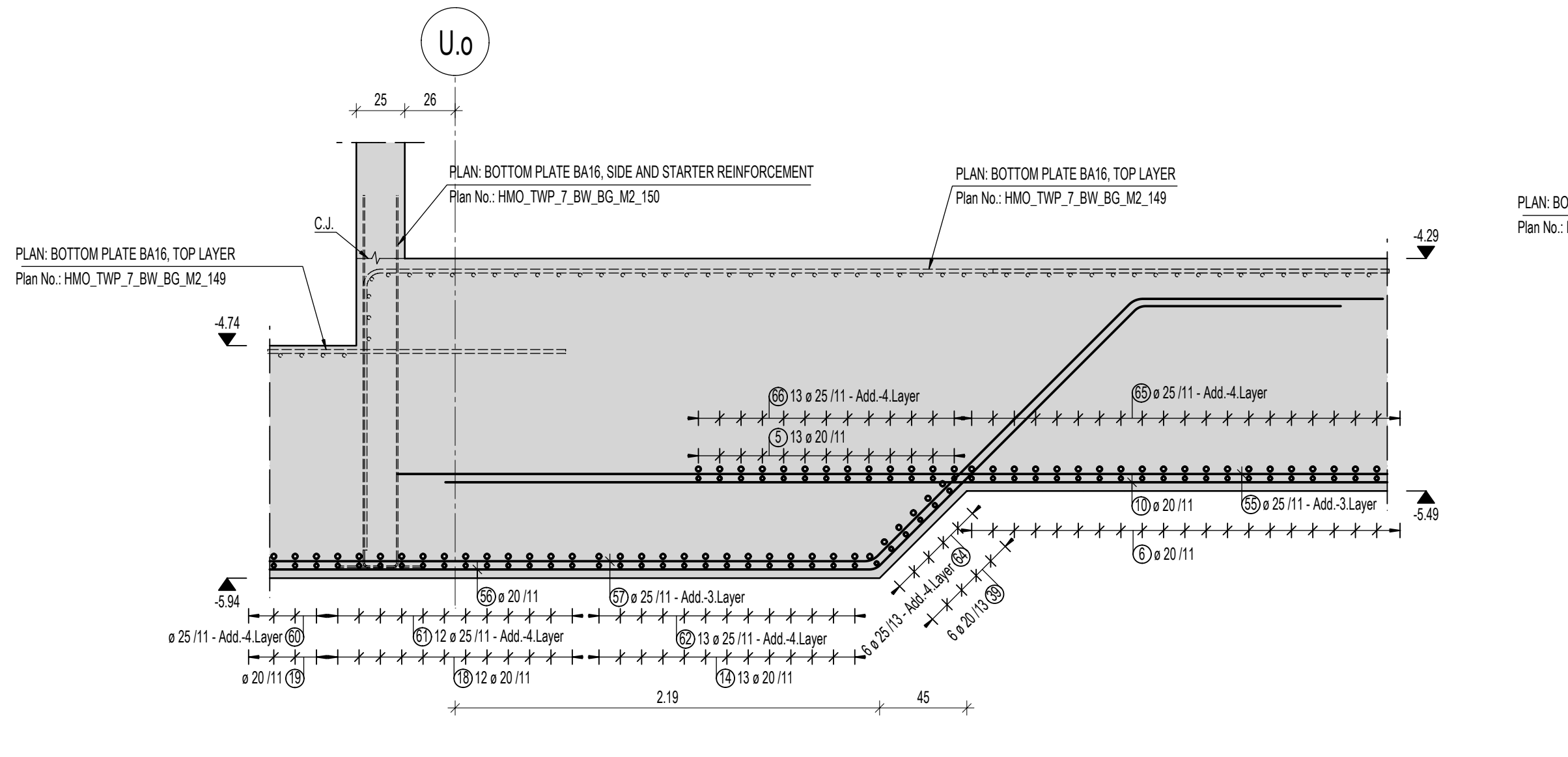

SECTION F-F

SCALE 1:25

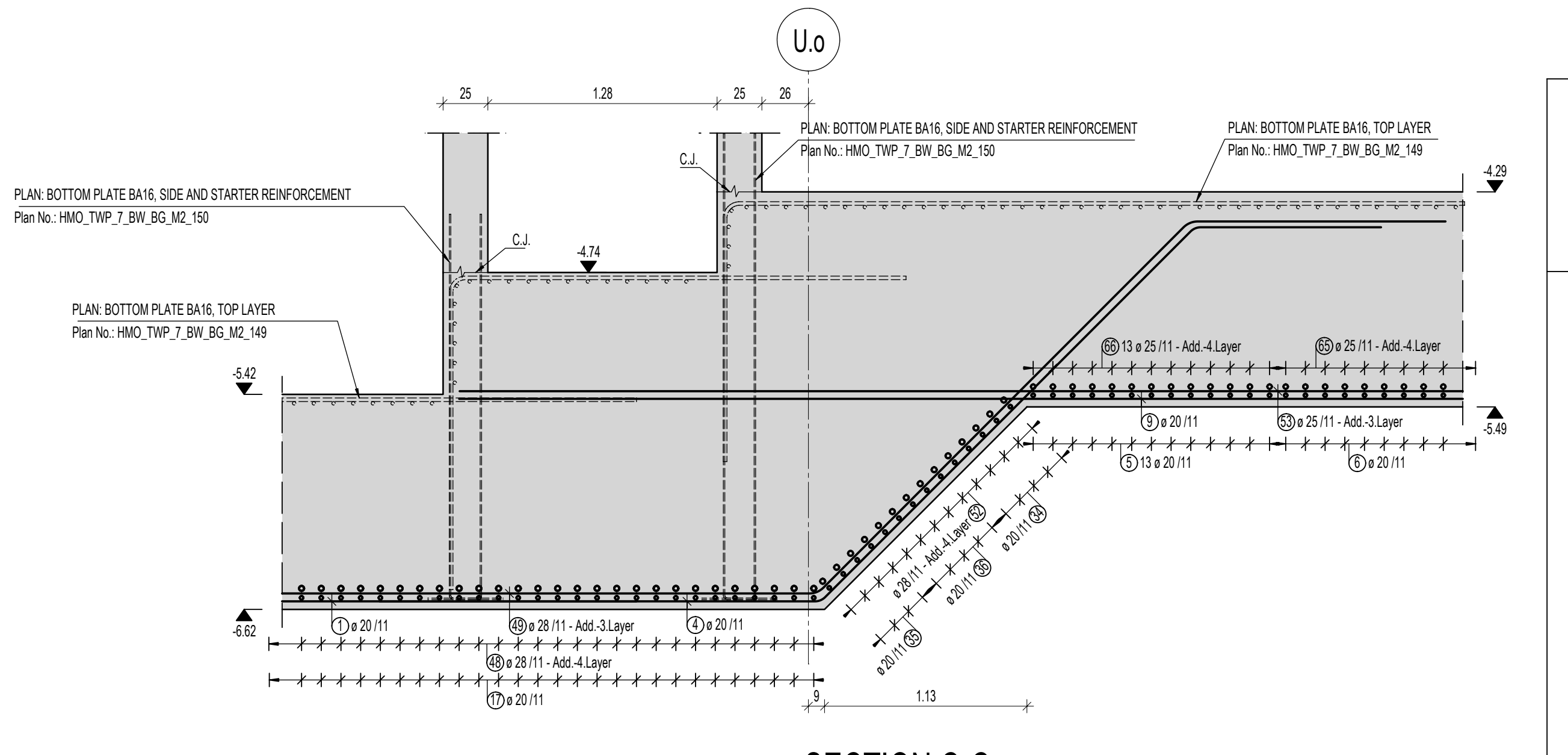

SECTION A-A

SCALE 1:25

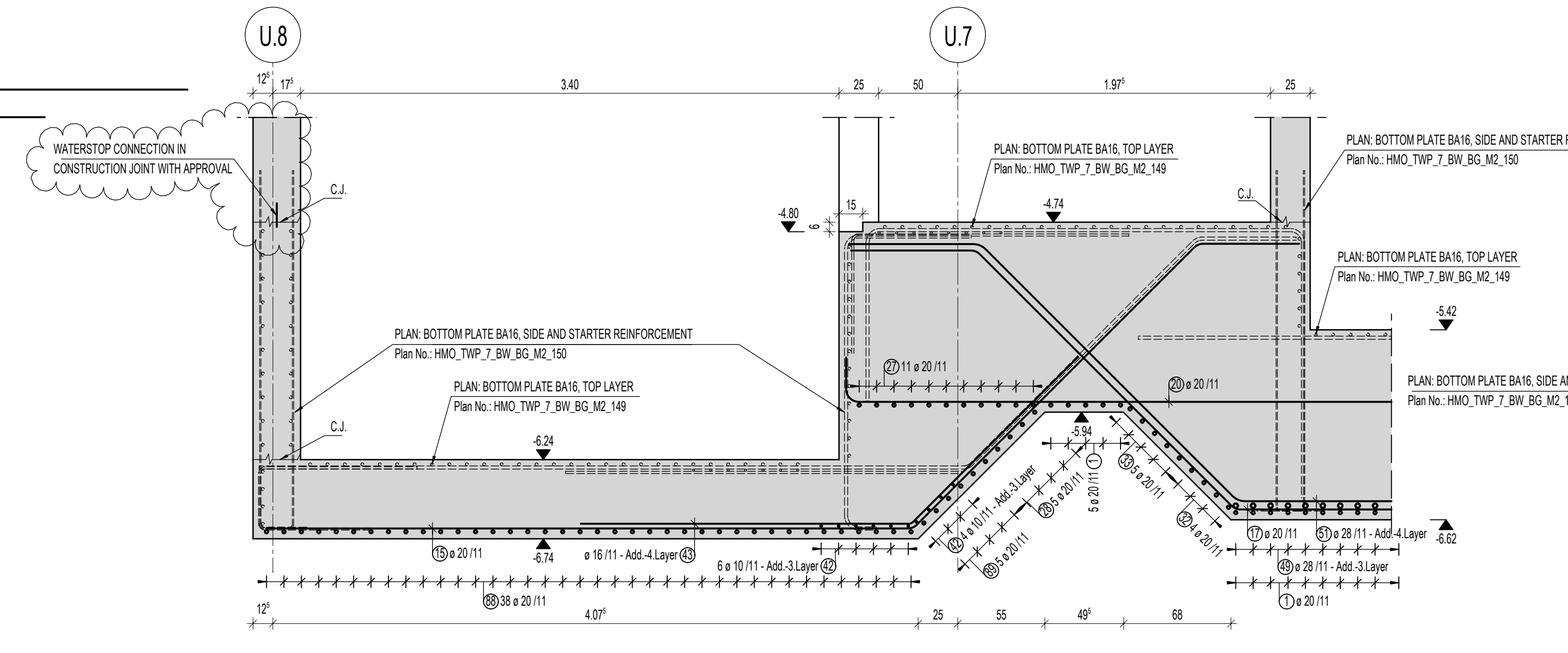
WATERSTOP CONNECTION IN CONSTRUCTION JOINT WITH APPROVAL

SECTION B-B

SCALE 1:25

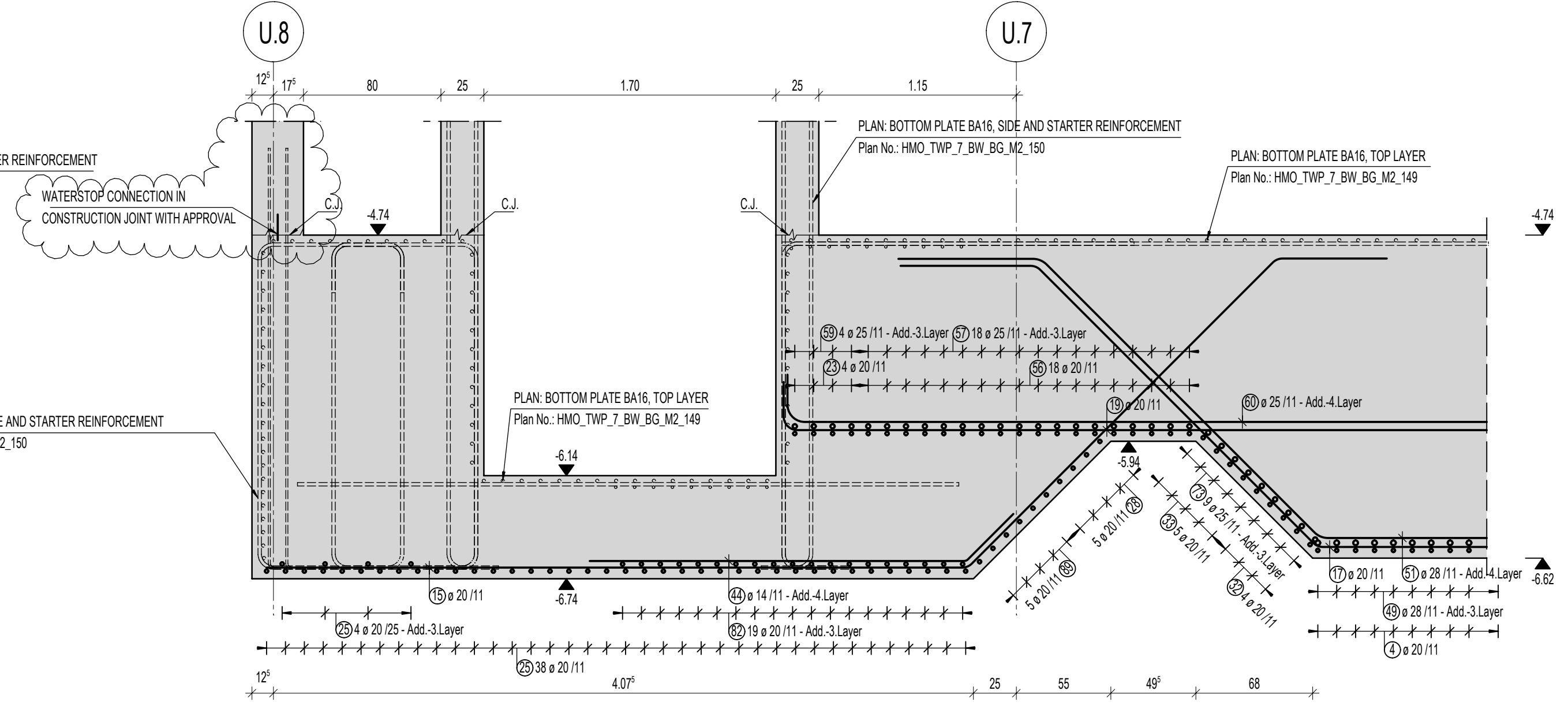
WATERSTOP CONNECTION IN CONSTRUCTION JOINT WITH APPROVAL

SECTION C-C

SCALE 1:25

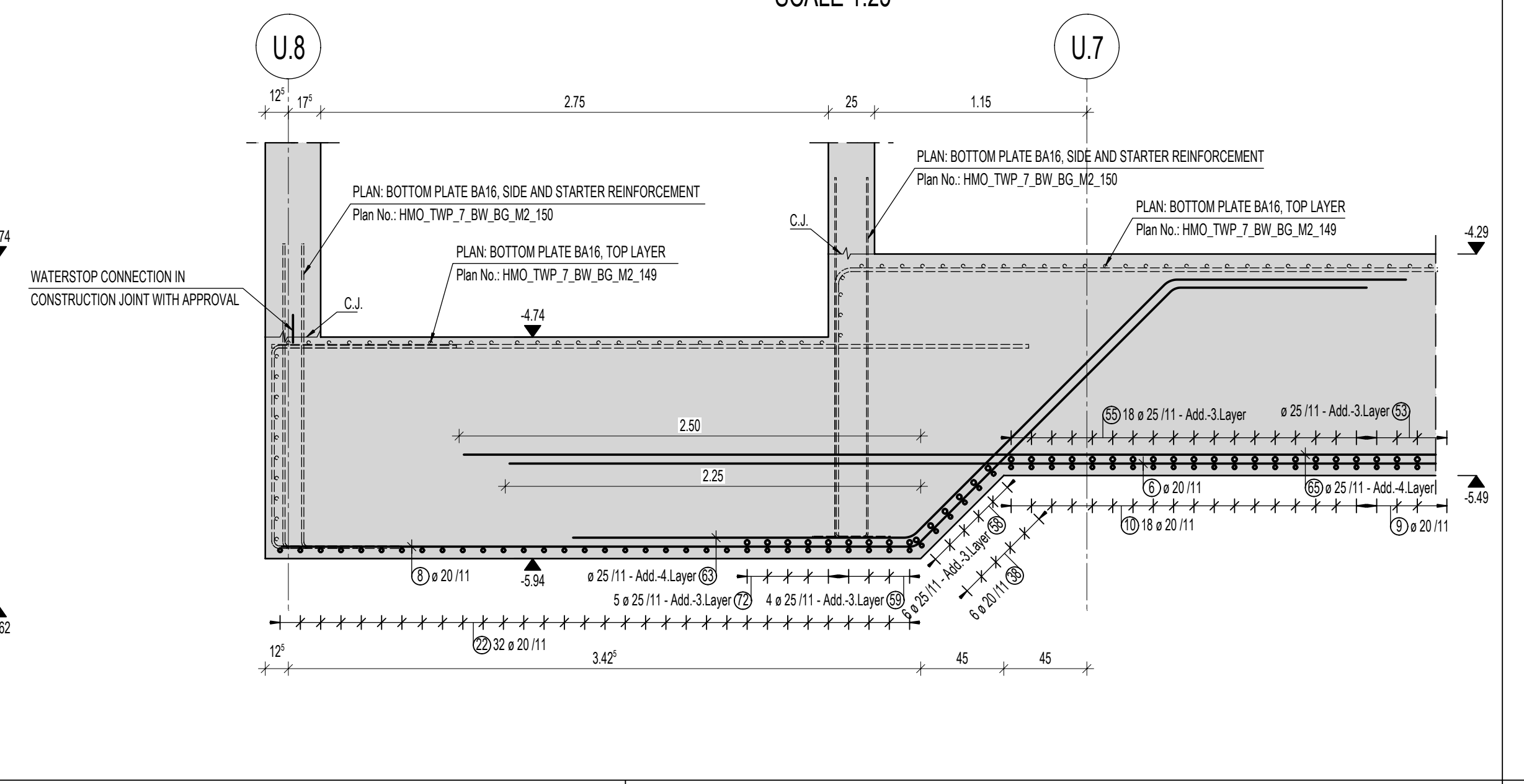
WATERSTOP CONNECTION IN CONSTRUCTION JOINT WITH APPROVAL

Minimum values of the bending roll diameter Dmin for bending bars once

BS EN 1992-1-1 Tab. 8.1 BS a)

	Hooks, angled hooks, Loops [D_{min}]		Inclined bars or other bent bars [D_{min}]		
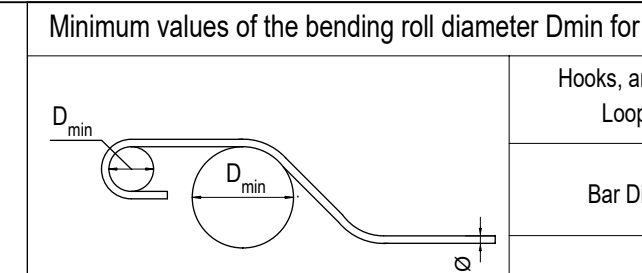	Bar Diameter ø		Minimum values of the concrete cover perpendicular to the curvature plane		
	< 20 mm	≥ 20 mm	> 100 mm > 7 ø	> 50 mm > 3 ø	≤ 50 mm ≤ 3 ø
Normal concrete	4 ø	7 ø	10 ø	15 ø*	20 ø

* If the value "D_{min} = 15 x ø" applied, it should be shown in bending steel list.

Minimum values of the bending roll diameter Dmin
for welded bent reinforcement and mesh bent after welding.

BS EN 1992-1-1 Tab. 8.1 BS b)

	Predominantly stationary effects		Predominantly non-stationary effects	
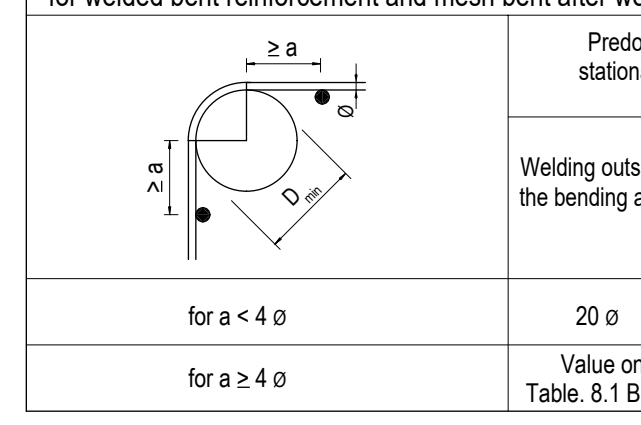	Welding outside the bending area	Welding inside the bending area	Welding on the outer side of the bend	Welding on the inner side of the bend
for a < 4 ø	20 ø	20 ø	100 ø	500 ø
for a ≥ 4 ø	Value on Table. 8.1 BS a)			

Component	Alignment	Concrete	Exposure Classes	c_{min} [3)] [mm]	Δc_{def} [mm]	c_{nom} [mm]	Moistness	Water-proofing
Roofing	Top	C30/37	XC3	20	15	35	WO	2)
	Bottom		XC1	10	10	20	WO	-
Slab above floors	Top/Bottom Bottom (Parking)	C30/37	XC1	10	10	20	WO	-
Slab above underground parking	Top (Soil)	C30/37	XC3	20	15	35	WO	2)
	Top		XC1	10	10	20	WO	-
	Bottom (Parking)		XC3, XF1	20	15	35	WF	-
Stairs	Top/Bottom	C20/25	XC1	10	10	20	WO	-
Walls / Columns	Inside	C30/37 (WP) - C50/60	XC1	10	10	20	WO	-
	Outside		XC1	10	10	20	WO	-
	Outside, Soil		XC2, XF1	20	15	35	WF	-
	Parking		XC3, XF2	20	15	35	WF	(Pic. 10)[1)]
Bottom plate under basement	Top	C30/37-C35/45 WP	XC1	10	10	20	WO	-
	Bottom (Soil)		XC2, XA1, XF1	15-20	15	30-35	WF	-
Bottom plate under parking	Top (Parking)	C30/37-C35/45 WP	XC3, XD1, XF1	40	15	55	WF	B1[1)]
	Bottom (Soil)		XC2, XA1, XF1	15-20	15	30-35	WF	-
Ramps	Top	C35/45	XC3, XD3, XF2	40	15	55	WF	B1/C1[1)]
	Bottom		XC3, XF1	20	15	35	WF	-
Elevator pits	Inside, Top	C30/37 WP	XC1	10	10	20	WO	-
	Outside, Bottom		XC2, XA1, XF1	20	15	35	WF	-
Steel grade	B 500 A							

[1)] Waterproofing in accordance with DBV leaflet "Car parks and underground car parks" from 2018, with maintenance plan and Repair of cracks and defects. Locally occurring cracks must be permanently closed by suitable measures

[2)] Black waterproofing in accordance with BS 18531/18532 and DBV leaflet as specified by the architect

[3)] For XC2+XC3, reduce by 5mm due to 2 strength classes above C20/25.

Observe bond strength

A coefficient of friction of μ=0.60 was used to determine the crack width-limiting reinforcement of the floor slab and a concrete with slow strength development was assumed ($r \leq 0.3$, factor 0.85), which reaches around 70% of the tensile strength after 7 days ($f_{ct,eff}$=0.85 x 0.70f_{ctm} for slow hardening).
The average strength development of the concrete is assumed for the other components ($f_{ct,eff} \geq 0.70 f_{ctm}$ for normal hardening).

General notes:

- All construction joints must be rough in accordance with BS EN 1992-1-1, Section 6.2.5 (unless otherwise specified)
- All dimensions of the reinforcing steel are external dimensions
- U-locks must always be offset (unless otherwise specified)
- The specified concrete covers must be observed. The reinforcement must be installed in such a way that its position is secured. (see BS EN 13670 in conjunction with BS 1054-3 Chapter 2.6.5 or DBV leaflet on concrete cover and reinforcement)
- The reinforcement is installed according to layers and not according to item numbers

Abbreviation

V.S. - Vertical starter
H.S. - Horizontal starter
Top. - Top layer
Bot. - Bottom layer
Add. - Additional reinforcement
Stir. - Stirrup
M.S. - Mounting spacer
C.J. - Construction joint
WS. - Waterstop
WP - Waterproof

Legend:

Index cloud
Clearing cloud

Notice :

Please apply low-shrinkage, slow-hardening for Waterproof (WP) concrete in construction

MATERIALS/COMPONENT

▒ Reinforced Concrete	▨ Masonry
▨ Unreinforced Concrete	┆ Non-load bearing walls
▩ Prefabricated elements	▨ Upper reinforced concrete components
—⌇—⌇— Construction joint	

Related plans:

Reinforcement plans number:

HMO_TWP_7_BW_BG_M2_149
HMO_TWP_7_BW_BG_M2_150
HMO_TWP_7_BW_BG_M2_139
HMO_TWP_7_BW_BG_M1_146
HMO_TWP_7_BW_BG_M1_147
HMO_TWP_7_BW_BG_N2_159
HMO_TWP_7_BW_BG_M1_145

REV.	DESCRIPTION	DATE
-	First delivery	01.07.2019
1	Approval with comments.	23.08.2019
2	Reinforcement adding / adjusting.	24.10.2019
3	Approval without comments.	05.12.2019

Project	Stage	Phase	Type	Level	Component	Plan number	Index	Status
HMO	TWP	7	BW	BG	M2	148	3	F

EXECUTION PLANNING

Builder

General contractor

Plan author

Specialist planner

Project

Reference plan / external reference

Overview Plan

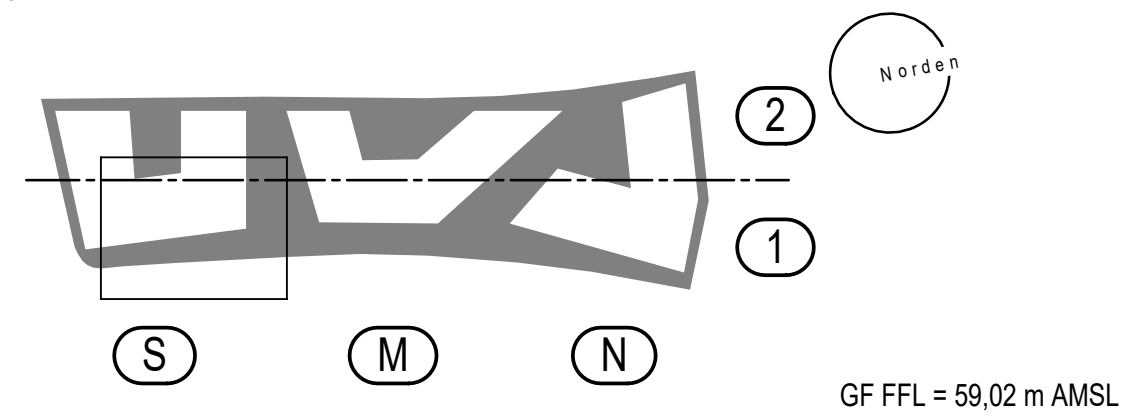
Norden
2
1
S
M
N

GF FFL = 59,02 m AMSL
Measured water level = 57,00 m AMSL
AMSL - Above mean sea level

Plan content	Plan author	Date	Rev.
BOTTOM PLATE BA16, BOTTOM LAYER COMPONENT MIDDLE 2		05.12.2019	3
	Scale: 1:50	Filename: HMO_TWP_7_BW_BG_M2_148_3_F	

H/B = 841 / 1700 (1.43m²)

Allplan 2022

BOTTOM PLATE BA16; MAIN REINFORCEMENT; TOP LAYER

GRID U.n-U.p/U.6-U.8

C30/37, $c_{v,top}$=2.0-5.5cm, $c_{v,bottom}$=3.5cm

SCALE 1:50

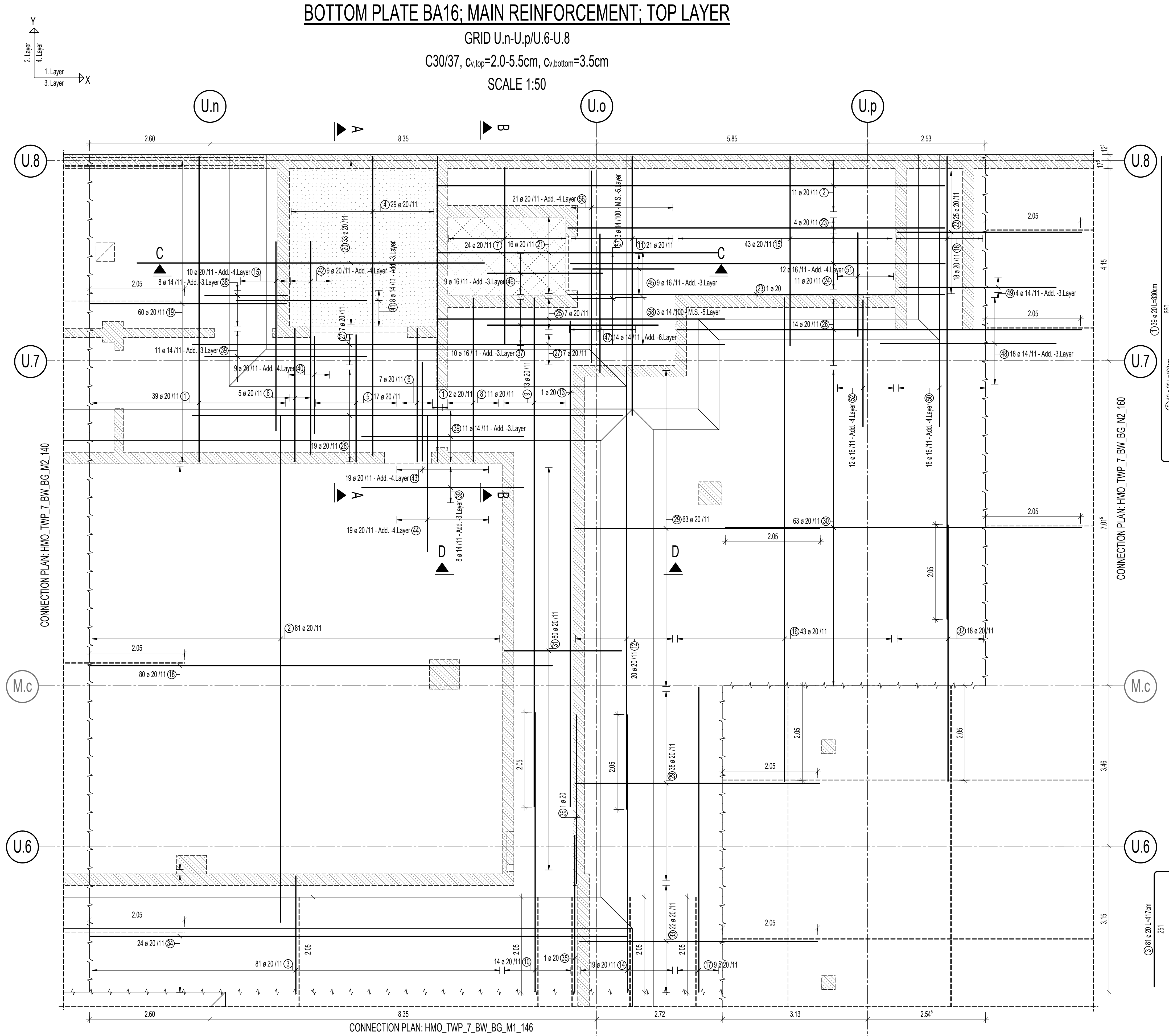

1. Layer
2. Layer
3. Layer
4. Layer
Y
X
U.n
U.o
U.p
U.8
U.7
U.6
M.c
A
B
C
D
2.60
8.35
5.85
2.53
2.72
3.13
CONNECTION PLAN: HMO_TWP_7_BW_BG_M2_140
CONNECTION PLAN: HMO_TWP_7_BW_BG_N2_160
CONNECTION PLAN: HMO_TWP_7_BW_BG_M1_146

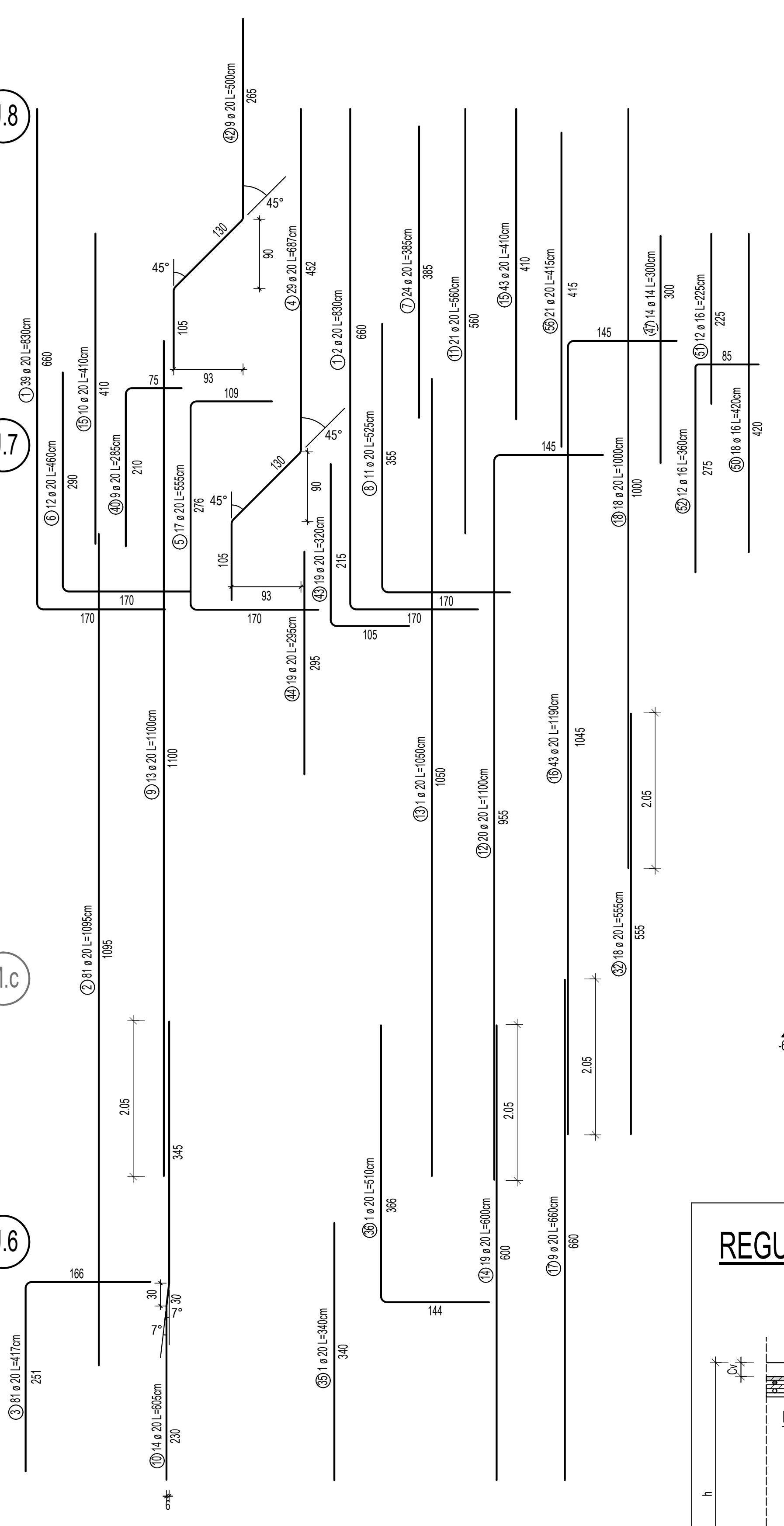

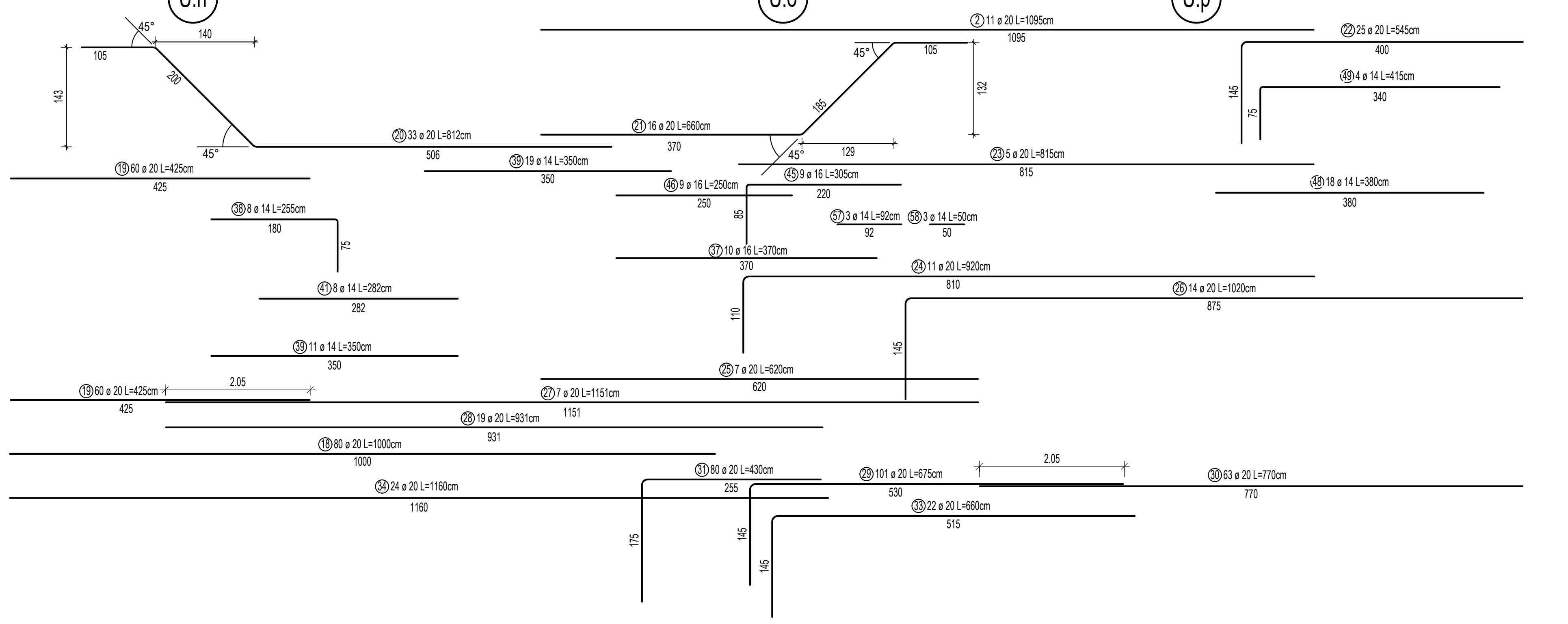

Ø [mm]	Bond conditions	C30/37		C35/45	
		l_{bd} ≥	l_0 ≥	l_{bd} ≥	l_0 ≥
	[-]	[cm]	[cm]	[cm]	[cm]
8	Poor	45	85	40	75
	Good	30	60	30	55
10	Poor	55	105	50	95
	Good	40	75	35	65
12	Poor	65	125	55	110
	Good	45	90	40	80
14	Poor	75	145	65	130
	Good	50	100	45	90
16	Poor	85	165	75	150
	Good	60	120	55	105
20	Poor	105	205	95	185
	Good	75	145	65	130
25	Poor	130	260	115	230
	Good	90	180	85	165
28	Poor	145	290	130	260
	Good	100	200	90	180

SECTION A-A

SCALE 1:25

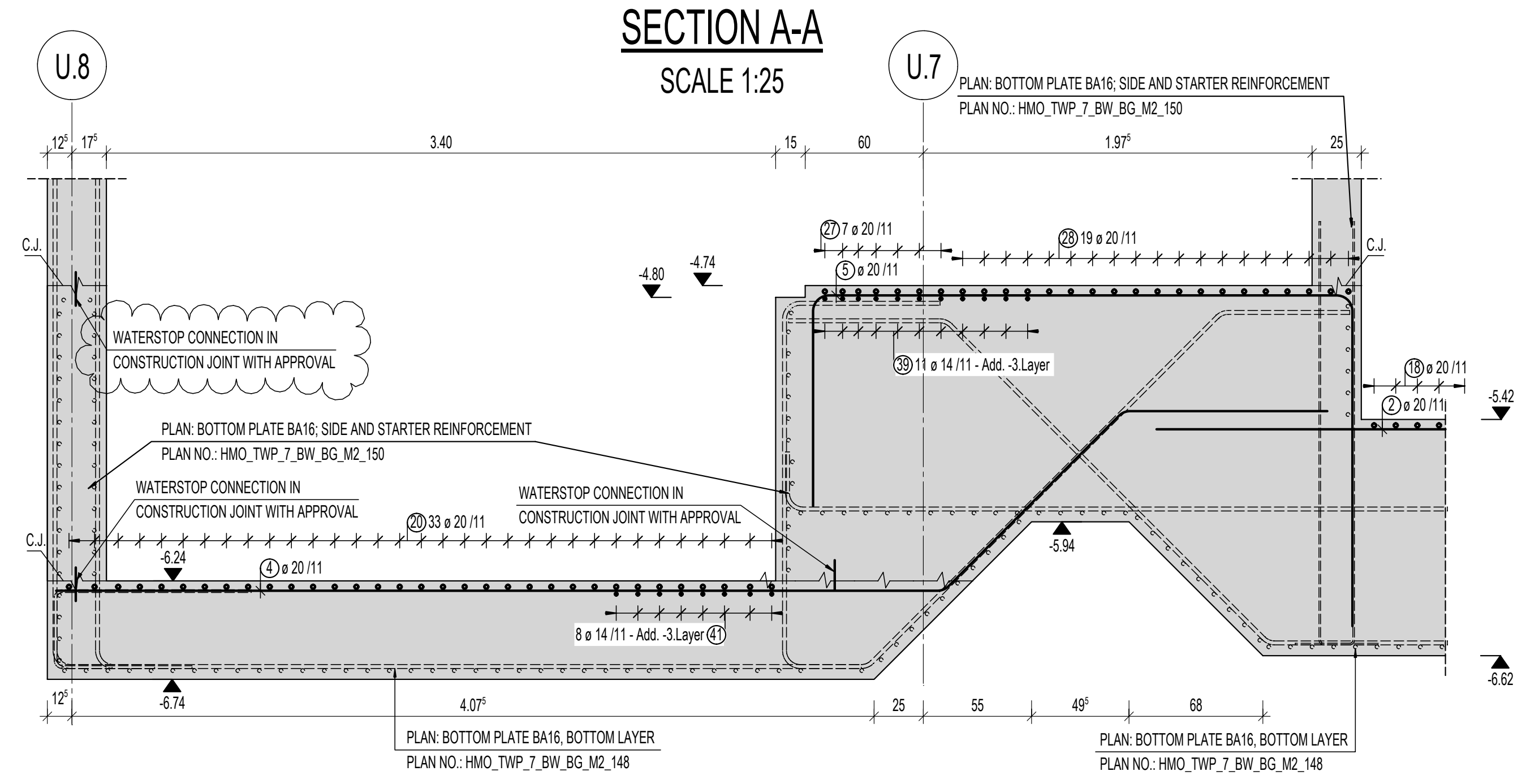

U.8
U.7
C.J.
WATERSTOP CONNECTION IN CONSTRUCTION JOINT WITH APPROVAL
PLAN: BOTTOM PLATE BA16; SIDE AND STARTER REINFORCEMENT
PLAN NO.: HMO_TWP_7_BW_BG_M2_150
PLAN: BOTTOM PLATE BA16, BOTTOM LAYER
PLAN NO.: HMO_TWP_7_BW_BG_M2_148
-6.24
-6.74
-4.80
-4.74
-5.94
-5.42
-6.82

SECTION B-B

SCALE 1:25

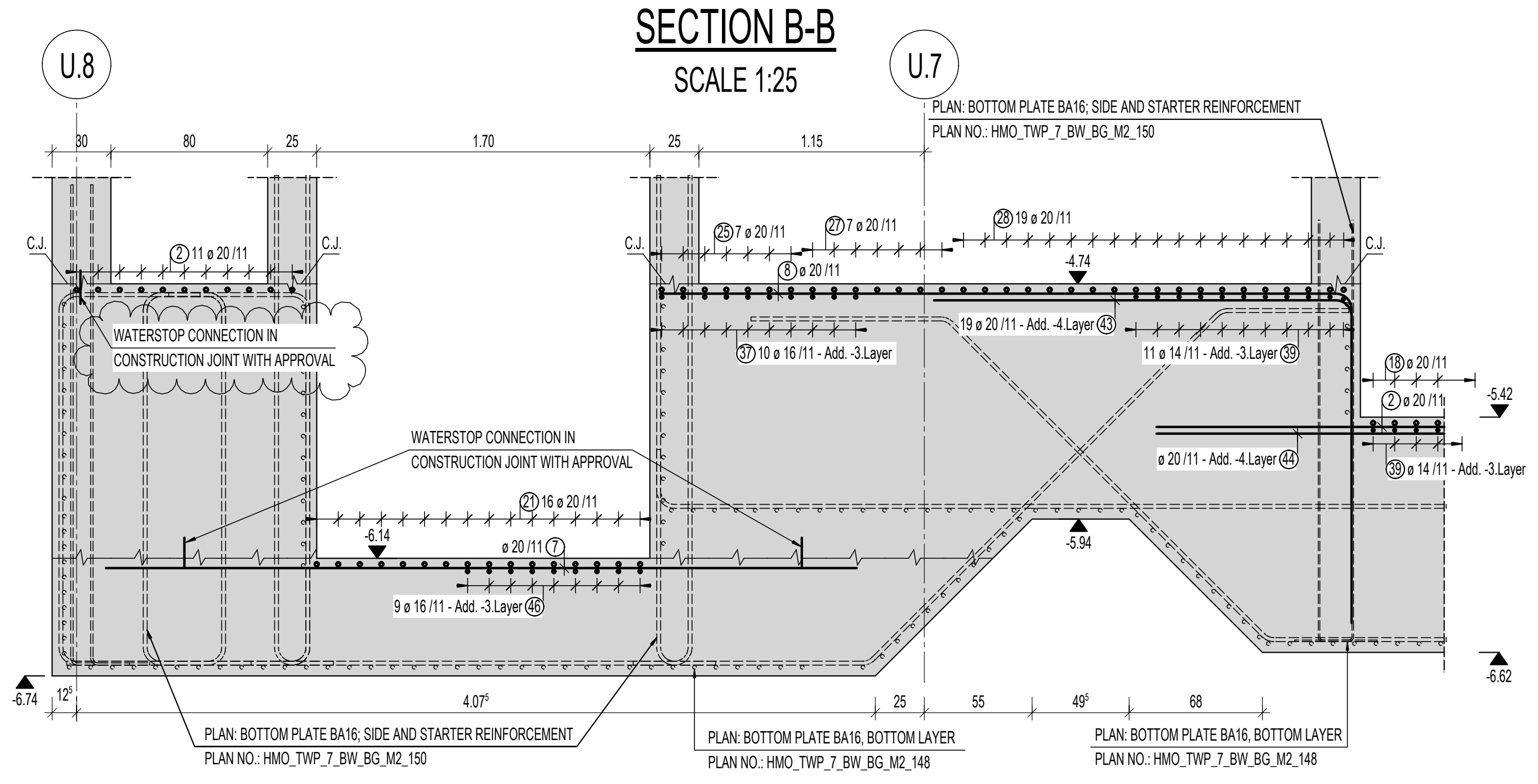

U.8
U.7
C.J.
WATERSTOP CONNECTION IN CONSTRUCTION JOINT WITH APPROVAL
PLAN: BOTTOM PLATE BA16; SIDE AND STARTER REINFORCEMENT
PLAN NO.: HMO_TWP_7_BW_BG_M2_150
PLAN: BOTTOM PLATE BA16, BOTTOM LAYER
PLAN NO.: HMO_TWP_7_BW_BG_M2_148
-6.14
-6.74
-4.74
-5.94
-5.42
-6.82

REGULAR DETAIL BOTTOM PLATE, DIRECTION X

SCALE 1:15

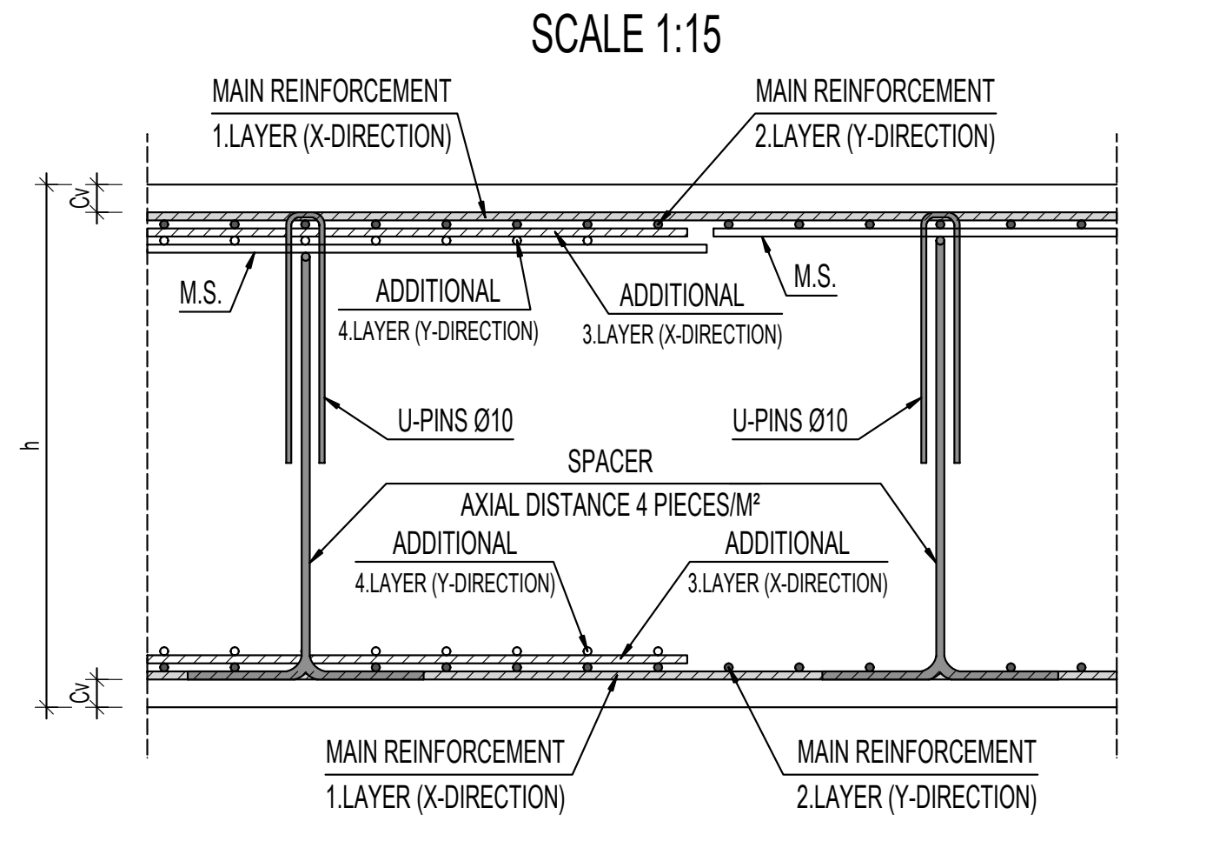

MAIN REINFORCEMENT 1.LAYER (X-DIRECTION)
MAIN REINFORCEMENT 2.LAYER (Y-DIRECTION)
M.S.
ADDITIONAL 4.LAYER (Y-DIRECTION)
ADDITIONAL 3.LAYER (X-DIRECTION)
U-PINS Ø10
SPACER
AXIAL DISTANCE 4 PIECES/M²

REGULAR DETAIL BOTTOM PLATE, DIRECTION Y

SCALE 1:15

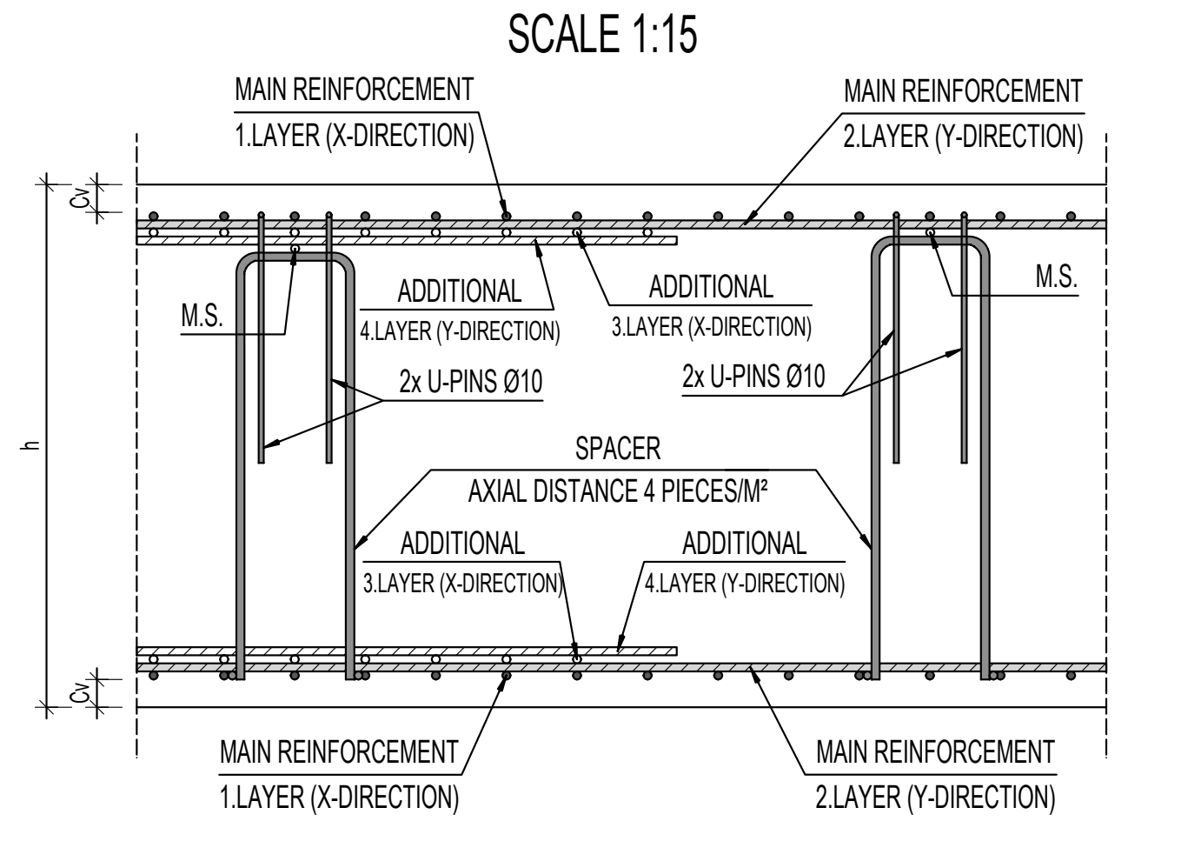

MAIN REINFORCEMENT 1.LAYER (X-DIRECTION)
MAIN REINFORCEMENT 2.LAYER (Y-DIRECTION)
M.S.
ADDITIONAL 4.LAYER (X-DIRECTION)
ADDITIONAL 3.LAYER (X-DIRECTION)
2x U-PINS Ø10
SPACER
AXIAL DISTANCE 4 PIECES/M²

SPACER DETAIL

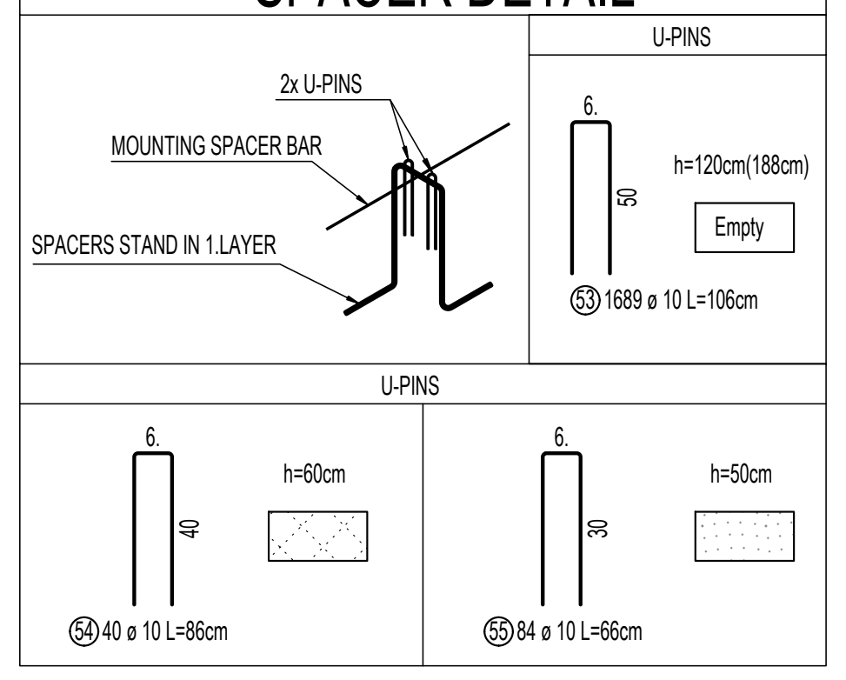

2x U-PINS
MOUNTING SPACER BAR
SPACERS STAND IN 1.LAYER
h=120cm(180cm)
Empty
U-PINS
h=60cm
h=50cm

DETAIL OF WATERSTOP IN OUTSIDE WALLS

SCALE 1:25

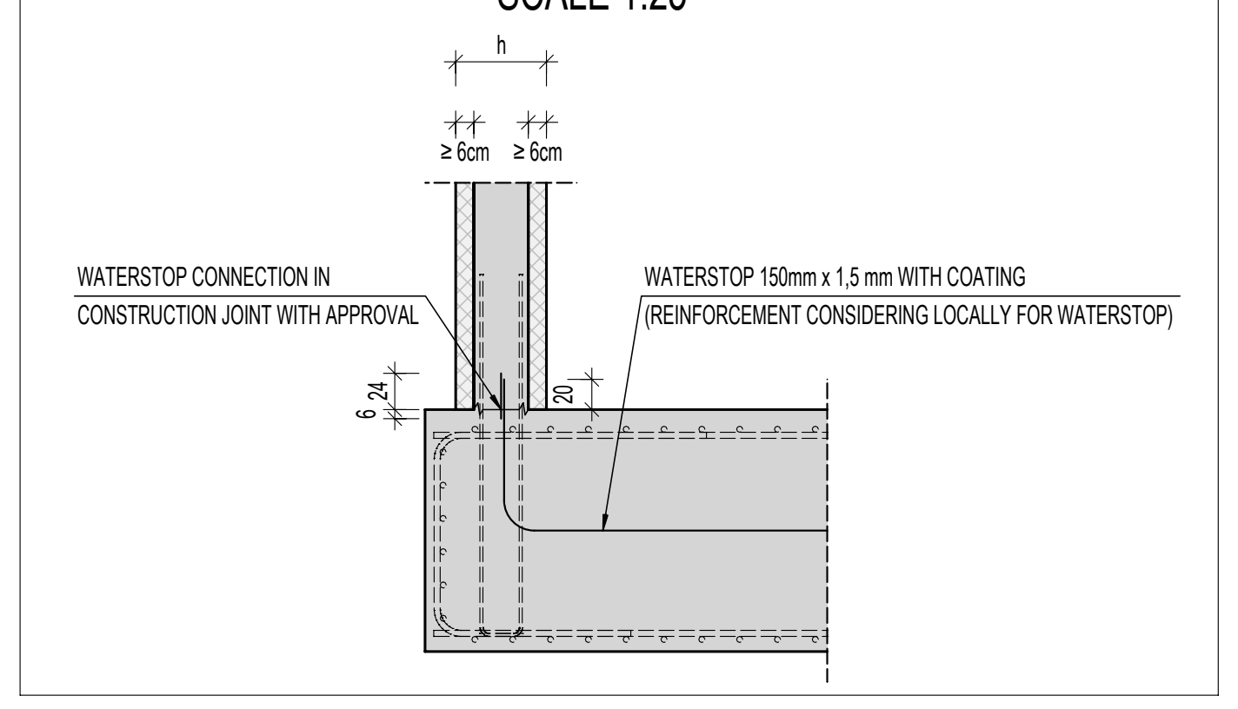

WATERSTOP CONNECTION IN CONSTRUCTION JOINT WITH APPROVAL
WATERSTOP 150mm x 1,5 mm WITH COATING (REINFORCEMENT CONSIDERING LOCALLY FOR WATERSTOP)
≥ 6cm

SECTION C-C

SCALE 1:25

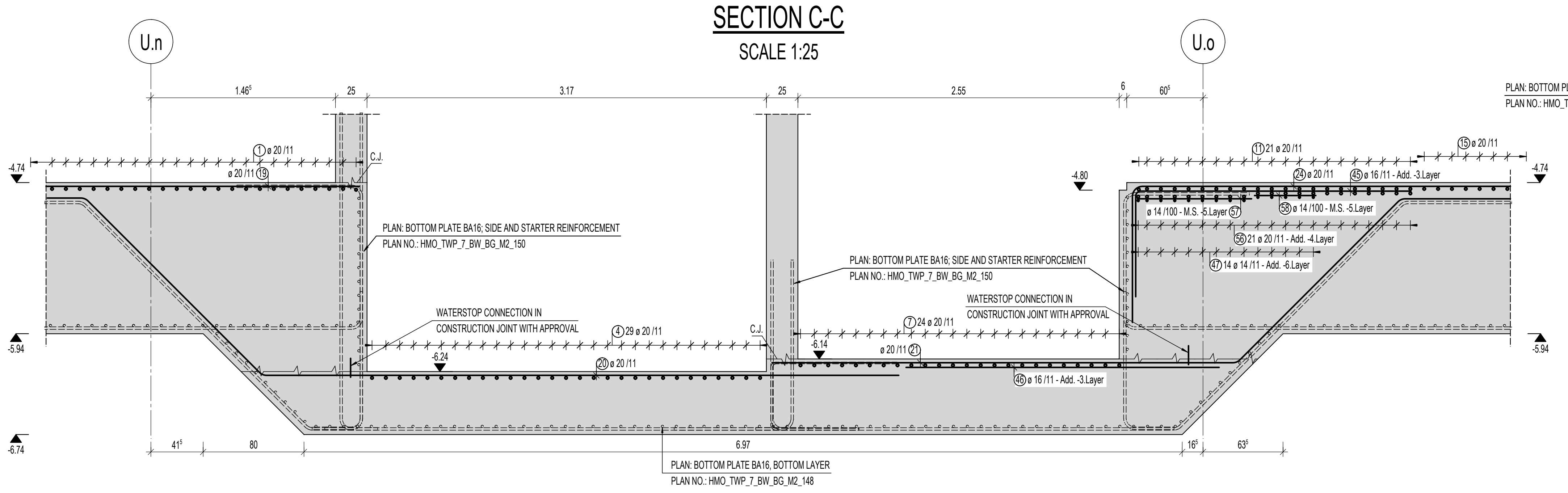

U.n
U.o
C.J.
PLAN: BOTTOM PLATE BA16; SIDE AND STARTER REINFORCEMENT
PLAN NO.: HMO_TWP_7_BW_BG_M2_150
WATERSTOP CONNECTION IN CONSTRUCTION JOINT WITH APPROVAL
PLAN: BOTTOM PLATE BA16, BOTTOM LAYER
PLAN NO.: HMO_TWP_7_BW_BG_M2_148
-4.74
-4.80
-5.94
-6.14
-6.24
-6.74

SECTION D-D

SCALE 1:25

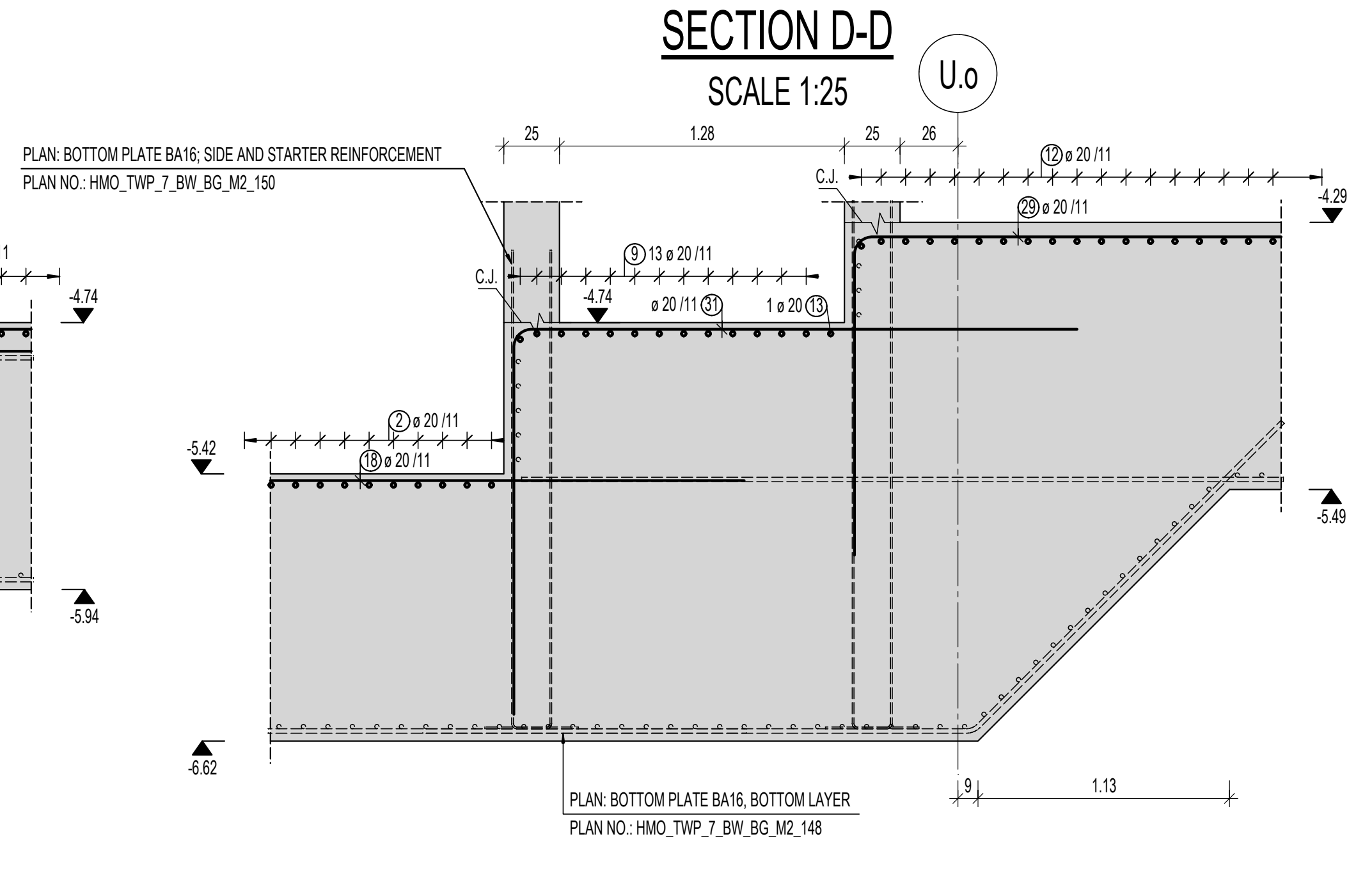

U.o
C.J.
PLAN: BOTTOM PLATE BA16; SIDE AND STARTER REINFORCEMENT
PLAN NO.: HMO_TWP_7_BW_BG_M2_150
PLAN: BOTTOM PLATE BA16, BOTTOM LAYER
PLAN NO.: HMO_TWP_7_BW_BG_M2_148
-4.29
-4.74
-5.42
-5.49
-6.62

OUTSIDE WALLS DETAIL

SCALE 1:25

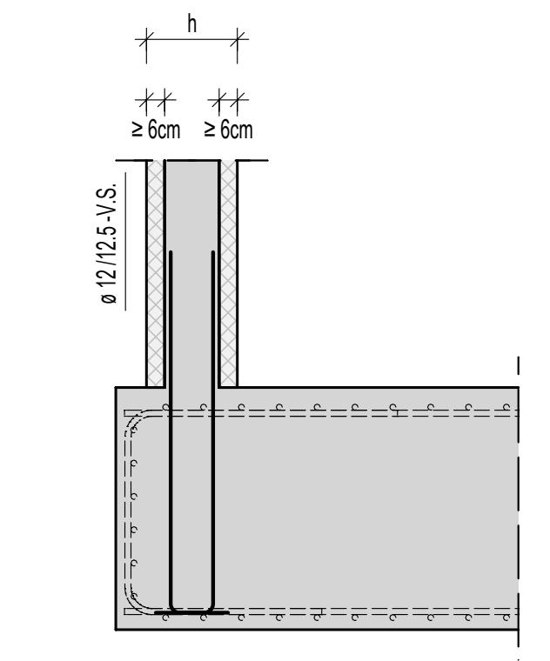

INSIDE WALLS DETAIL

SCALE 1:25

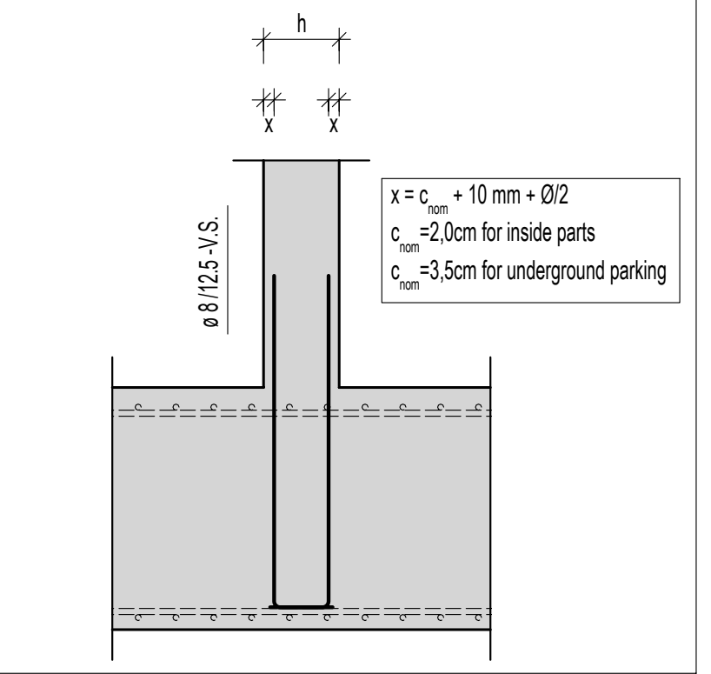

x = c_{nom} + 10 mm + Ø/2
c_{nom} =2.0cm for inside parts
c_{nom} =3.5cm for underground parking

Minimum values of the bending roll diameter Dmin for bending bars once BS EN 1992-1-1 Tab. 8.1 BS a)					
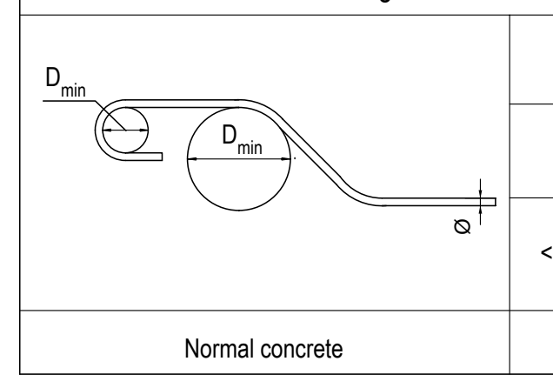	Hooks, angled hooks, Loops [D_{min}]		Inclined bars or other bent bars [D_{min}]		
	Bar Diameter ø		Minimum values of the concrete cover perpendicular to the curvature plane		
	< 20 mm	≥ 20 mm	> 100 mm > 7 ø	> 50 mm > 3 ø	≤ 50 mm ≤ 3 ø
Normal concrete	4 ø	7 ø	10 ø	15 ø *	20 ø

* If the value "D_{min} = 15 x ø" applied, it should be shown in bending steel list.

Minimum values of the bending roll diameter Dmin for welded bent reinforcement and mesh bent after welding. BS EN 1992-1-1 Tab. 8.1 BS b)				
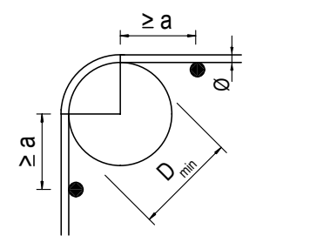	Predominantly stationary effects		Predominantly non-stationary effects	
	Welding outside the bending area	Welding inside the bending area	Welding on the outer side of the bend	Welding on the inner side of the bend
for a < 4 ø	20 ø	20 ø	100 ø	500 ø
for a ≥ 4 ø	Value on Table. 8.1 BS a)			

Component	Alignment	Concrete	Exposure Classes	c_{min} [3] [mm]	Δc_{def} [mm]	c_{nom} [mm]	Moistness	Water-proofing
Roofing	Top	C30/37	XC3	20	15	35	WO	[2]
	Bottom		XC1	10	10	20	WO	-
Slab above floors	Top/Bottom Bottom (Parking)	C30/37	XC1	10	10	20	WO	-
Slab above underground parking	Top (Soil)	C30/37	XC3	20	15	35	WO	[2]
	Top		XC1	10	10	20	WO	-
	Bottom (Parking)		XC3, XF1	20	15	35	WF	-
Stairs	Top/Bottom	C20/25	XC1	10	10	20	WO	-
Walls / Columns	Inside	C30/37 (WP) - C50/60	XC1	10	10	20	WO	-
	Outside		XC1	10	10	20	WO	-
	Outside, Soil		XC2, XF1	20	15	35	WF	-
	Parking		XC3, XF2	20	15	35	WF	(Pic. 10)[1]
Bottom plate under basement	Top	C30/37-C35/45 WP	XC1	10	10	20	WO	-
	Bottom (Soil)		XC2, XA1, XF1	15-20	15	30-35	WF	-
Bottom plate under parking	Top (Parking)	C30/37-C35/45 WP	XC3, XD1, XF1	40	15	55	WF	B1[1]
	Bottom (Soil)		XC2, XA1, XF1	15-20	15	30-35	WF	-
Ramps	Top	C35/45	XC3, XD3, XF2	40	15	55	WF	B1/C1[1]
	Bottom		XC3, XF1	20	15	35	WF	-
Elevator pits	Inside, Top	C30/37 WP	XC1	10	10	20	WO	-
	Outside, Bottom		XC2, XA1, XF1	20	15	35	WF	-
Steel grade	B 500 A							

[1] Waterproofing in accordance with DBV leaflet "Car parks and underground car parks" from 2018, with maintenance plan and Repair of cracks and defects. Locally occurring cracks must be permanently closed by suitable measures

[2] Black waterproofing in accordance with BS 18531/18532 and DBV leaflet as specified by the architect

[3] For XC2+XC3, reduce by 5mm due to 2 strength classes above C20/25.

Observe bond strength

A coefficient of friction of μ=0.60 was used to determine the crack width-limiting reinforcement of the floor slab and a concrete with slow strength development was assumed (r ≤ 0.3, factor 0.85), which reaches around 70% of the tensile strength after 7 days ($f_{ct,eff}$=0.85 x 0.70f_{ctm} for slow hardening). The average strength development of the concrete is assumed for the other components ($f_{ct,eff}$ ≥ 0.70f_{ctm} for normal hardening).

General notes:

- All construction joints must be rough in accordance with BS EN 1992-1-1, Section 6.2.5 (unless otherwise specified)
- All dimensions of the reinforcing steel are external dimensions
- U-locks must always be offset (unless otherwise specified)
- The specified concrete covers must be observed. The reinforcement must be installed in such a way that its position is secured.
(see BS EN 13670 in conjunction with BS 1054-3 Chapter 2.6.5 or DBV leaflet on concrete cover and reinforcement)
- The reinforcement is installed according to layers and not according to item numbers

Abbreviation

V.S. - Vertical starter
H.S. - Horizontal starter
Top. - Top layer
Bot. - Bottom layer
Add. - Additional reinforcement
Stir. - Stirrup
M.S. - Mounting spacer
C.J. - Construction joint
WS. - Waterstop
WP - Waterproof

Legend:

Index cloud
Clearing cloud

Notice :

Please apply low-shrinkage, slow-hardening for Waterproof (WP) concrete in construction

MATERIALS/COMPONENT

▨	Reinforced Concrete	▨	Masonry
▨	Unreinforced Concrete	☐	Non-load bearing walls
▨	Prefabricated elements	▨	Upper reinforced concrete components
—∿—∿—	Construction joint		

Related plans:

Reinforcement plans number:
HMO_TWP_7_BW_BG_M2_148
HMO_TWP_7_BW_BG_M2_150
HMO_TWP_7_BW_BG_M2_140
HMO_TWP_7_BW_BG_M1_146
HMO_TWP_7_BW_BG_N2_160

REV.	DESCRIPTION	DATE
-	First delivery	19.07.2019
1	Approval with comments.	23.08.2019
2	Following the formwork plan changing.	01.11.2019
3	Approval without comments.	05.12.2019

Project	Stage	Phase	Type	Level	Component	Plan number	Index	Status
HMO	TWP	7	BW	BG	M2	149	3	F

EXECUTION PLANNING

Builder

General contractor

Plan author

Specialist planner

Project

HBF Münster Ostseite

Reference plan / external reference

Overview Plan

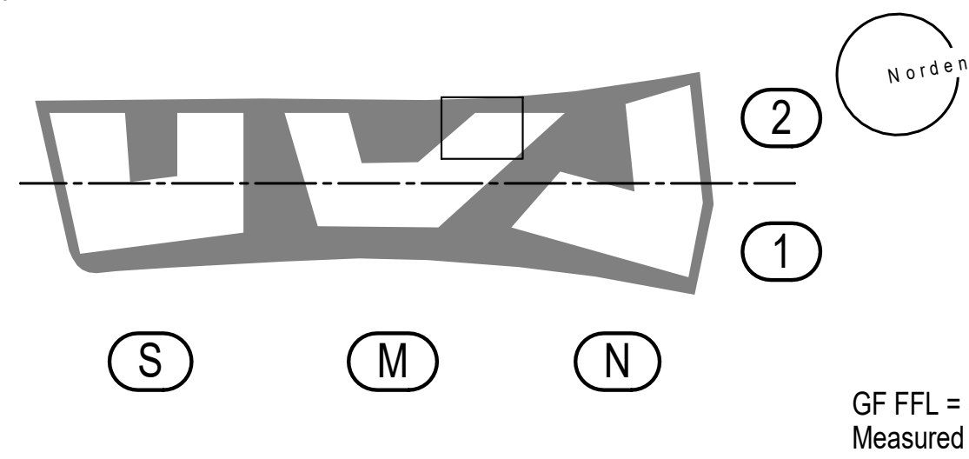

Norden
2
1
S
M
N

GF FFL = 59,02 m AMSL
Measured water level = 57,00 m AMSL
AMSL - Above mean sea level

Plan content	Plan author	Date	Rev.
BOTTOM PLATE BA16, TOP LAYER COMPONENT MIDDLE 2		05.12.2019	3
	Scale	Filename	
	1:50	HMO_TWP_7_BW_BG_M2_149_3_F	

H/W = 841 / 1250 (1.05m²)

Allplan 2022